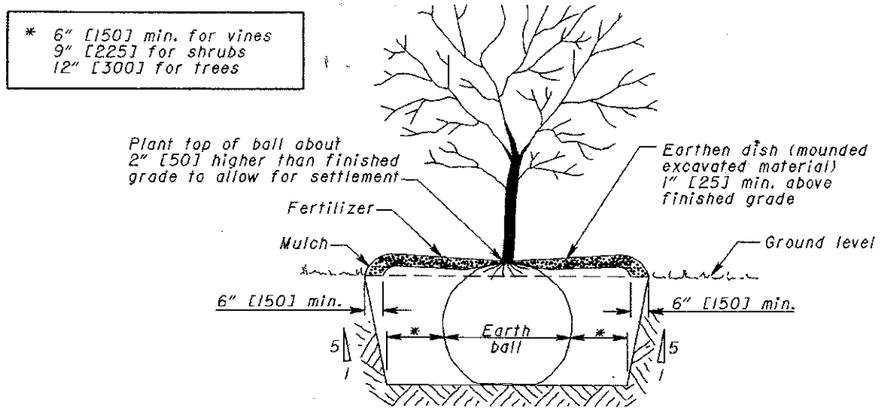

PLANTING ON LEVEL GROUND

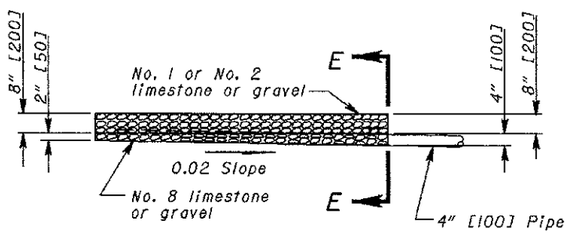

SECTION D-D

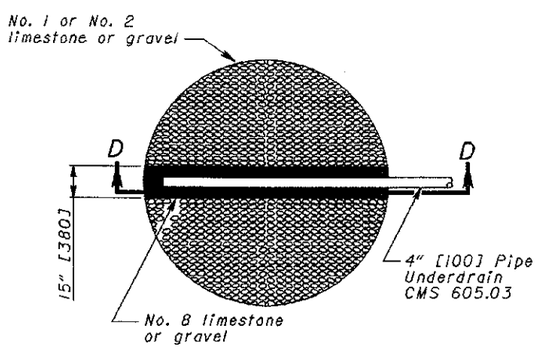

SECTION C-C

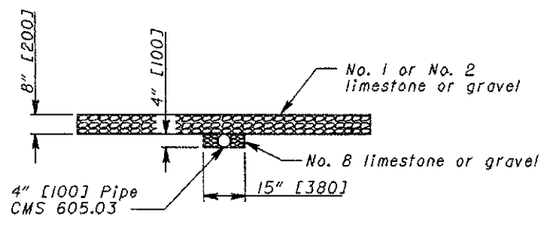

SECTION E-E

DRAINAGE DETAILS

For Drainage application, see Sheet 2 of 2.

NOTES

PLANTING DETAILS: The types and quantitites of fertilizer, water, mulch and backfill vary with different soil and weather conditions. The costs for these items shall be included in the unit price bid for the planting items.

Pit diameter and depth shall vary with the type and size of the plant, the soil type and other site conditions.

Backfill unless otherwise specified, shall be in accordance with CMS 661.11.

Hose shall be new garden hose (rubber and fabric). The 5/8" [16] dimension is inside diameter.

Wire furnished for tree bracing shall be of the type described as "regular galvanized soft wire of common quality."

Circling roots of container plants shall be vertically sliced before planting and backfilling.

Walls of planting holes dug with a tree spade shall be roughened before planting.

All wrap and stakes to be removed after one growing season. (See Sheet 2 of 2 for BRACING Details.)

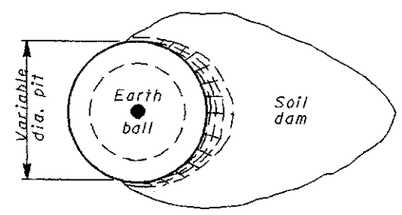

PLAN VIEW

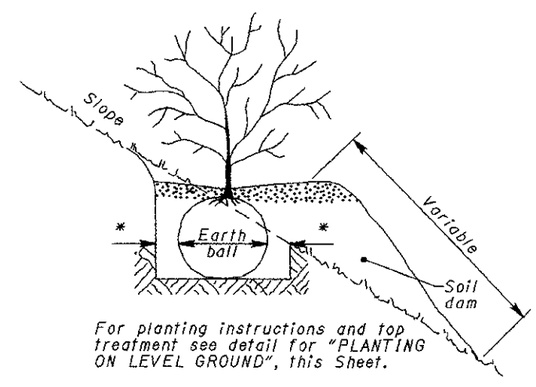

For planting instructions and top treatment see detail for "PLANTING ON LEVEL GROUND", this Sheet.

PLANTING ON SLOPE

THIS DRAWING REPLACES LA-1.2M DATED 9-6-95.

OHIO DEPARTMENT OF TRANSPORTATION
ROADWAY DESIGN ENGINEER
7-28-00
DATE

REVISIONS

STDS. ENGR. M. Evans
DRAWN D. Focke

All metric dimensions (in brackets [ ]) are in millimeters unless otherwise noted.

ROADWAY ENGINEERING SERVICES

STANDARD ROADWAY CONSTRUCTION DRAWING
PLANTING AND BRACING

NUMBER LA-1.2

1/2