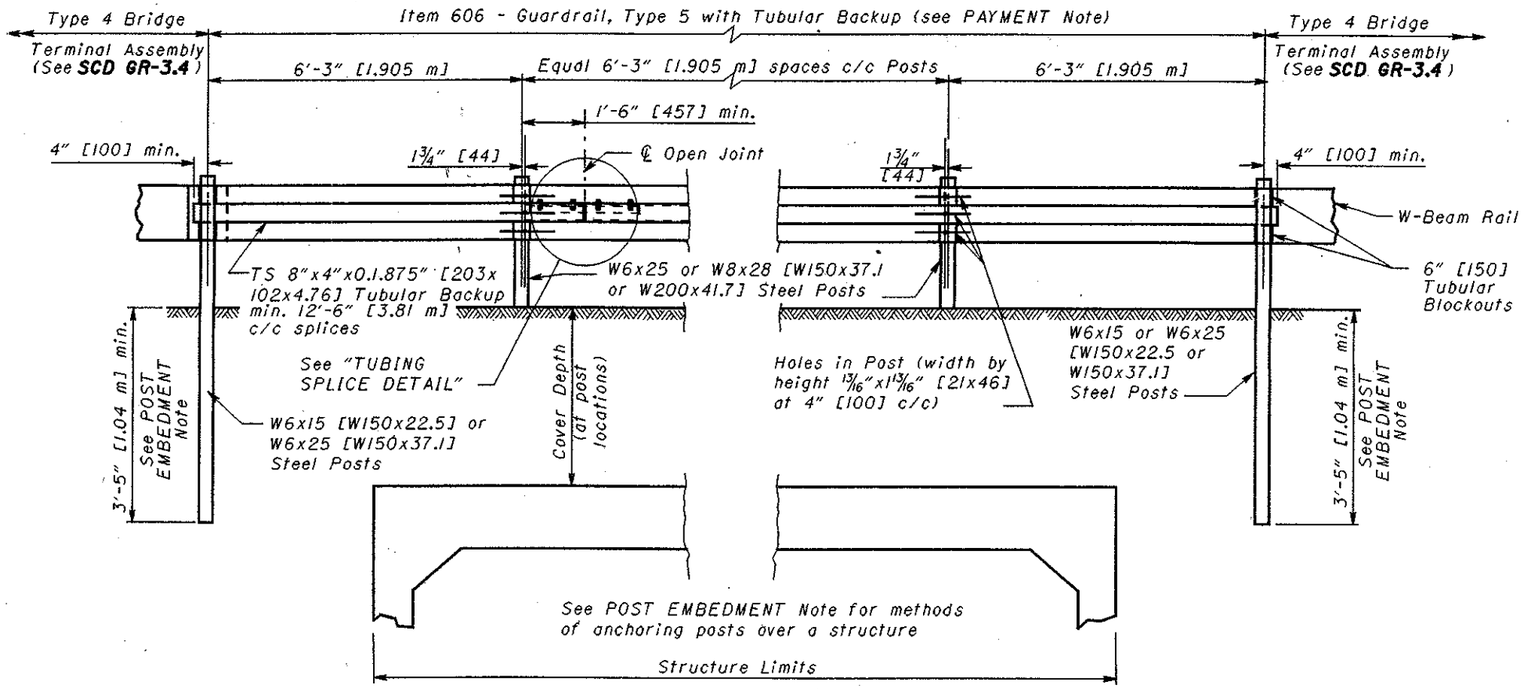

NOTES

APPLICATION: Guardrail, Type 5 with Tubular Backup is considered an NCHRP 350 Test Level 2 system. Use only on non-NHS roadways with design speeds equal to or less than 45 mph [70 km/h].

GALVANIZING: Rails, posts, base plates, bolts, nuts, washers and all tubular steel are to be galvanized as specified in CMS 711.02.

POST EMBEDMENT: Normal embedment depth is 3'-5" [1.04 m] (See **SCD GR-1.1**). For installation methods for posts of various cover over structures, see Sheet 2.

ANCHORING: Partial-depth anchoring is preferred to through-bolting. For partial depth anchoring use non-shrink, non-metallic grout as specified in CMS 705.20. Minimum embedment depths are 9" [225] for ⅞" [22] bolts and 10" [250] for 1¼" [32] bolts.

THROUGH-BOLTING: Drilling methods that cause spalling of the concrete where the bit passes through the underside of the slab is not permitted.
In haunches 6:1 or flatter, use beveled plate washers on the bottom surface to compensate for the slope. Through-bolting is not permitted in haunch areas with a slope greater than 6:1.

SIDE-MOUNTED POST ANCHORAGES TO STRUCTURES: Install anchorages according to **Structural Engineering's Standard Drawing DBR-2-73** and is paid under **Item 517 - Railing.**

PAYMENT: **Item 606 - Guardrail, Type 5 with Tubular Backup** is paid in Feet [Meters] for the length specified in the plans and shall include tubular backup as per Item 707.10, rails, posts and all other hardware, material and labor required to construct the guardrail as shown. The specified lengths should be for full W-Beam panels, i.e. evenly divisible by 12'-6" [3.81 m].

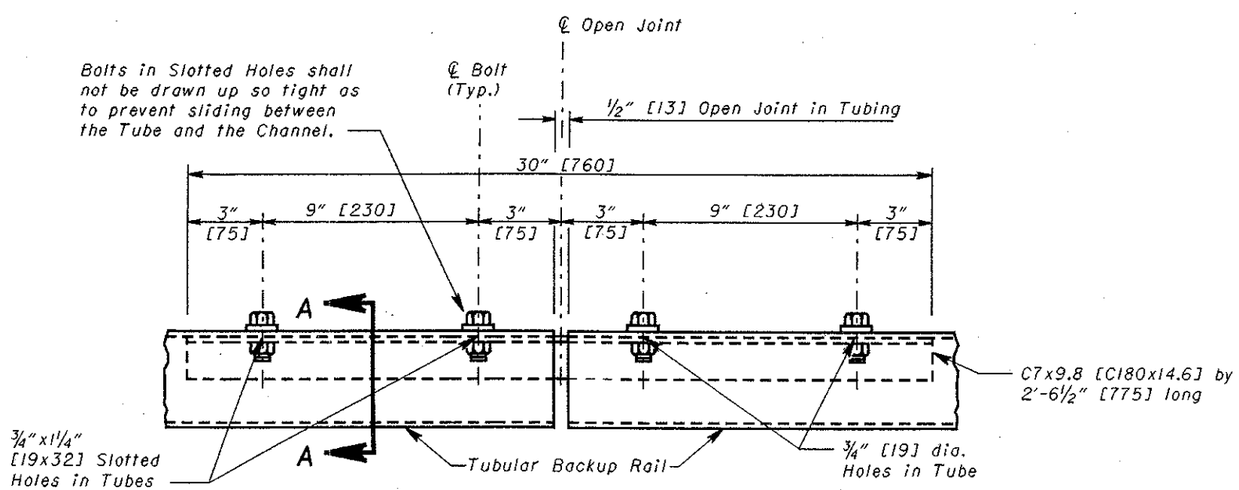

TUBING SPLICE DETAIL

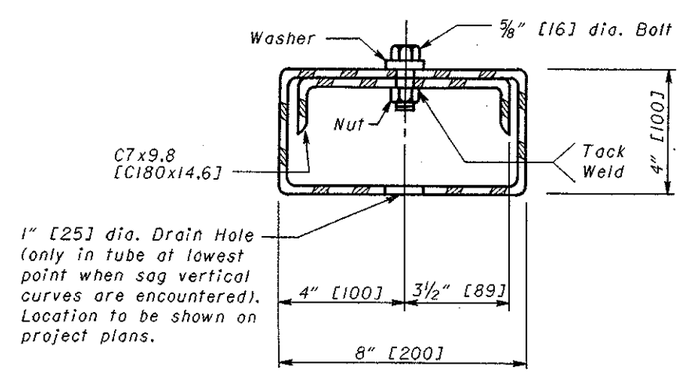

SECTION A-A

THIS DRAWING REPLACES GR-2.1M DATED 10-21-97.

OHIO DEPARTMENT OF TRANSPORTATION
ROADWAY DESIGN ENGINEER
4-18-03
DATE

STDS. ENGR. D. Focke

All metric dimensions [in brackets (]) are in millimeters unless otherwise noted.

ROADWAY ENGINEERING SERVICES

STANDARD ROADWAY CONSTRUCTION DRAWING
GUARDRAIL TYPE 5 WITH TUBULAR BACKUP

NUMBER GR-2.2

1/2