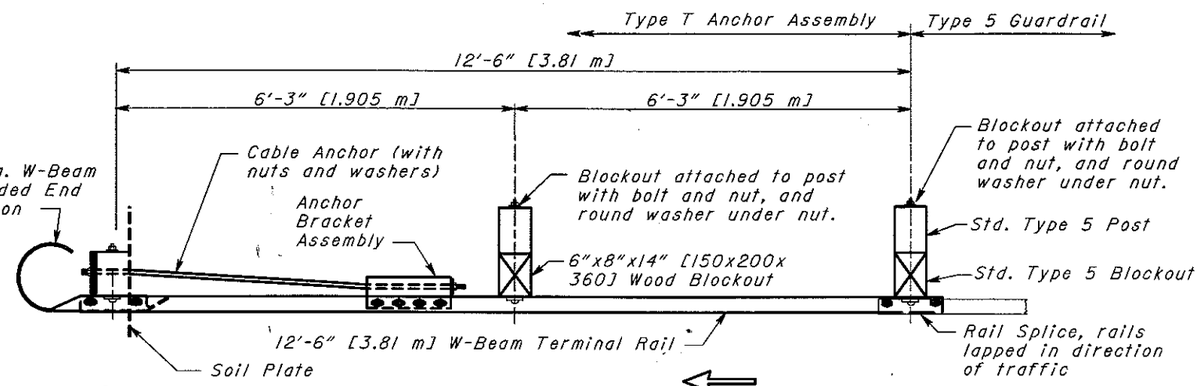

PLAN

Direction of Traffic flow for trailing end

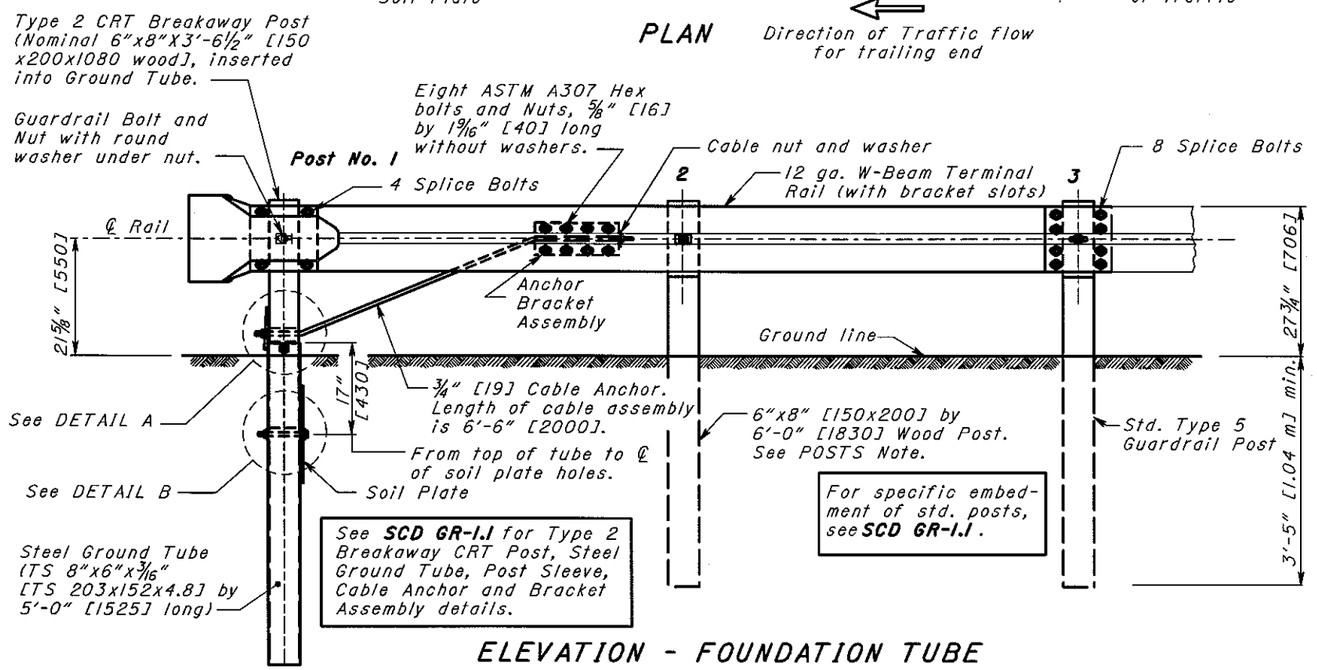

ELEVATION - FOUNDATION TUBE

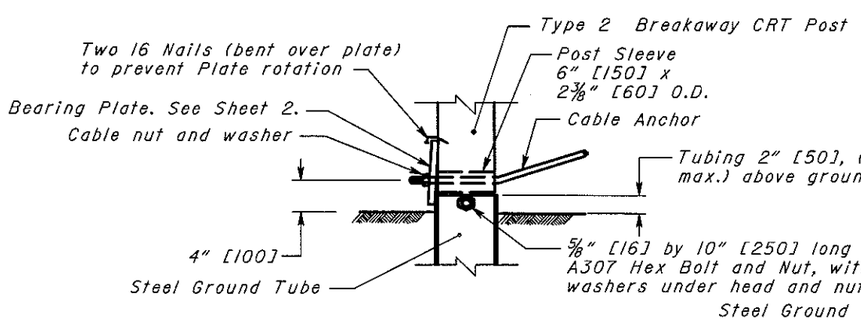

DETAIL A

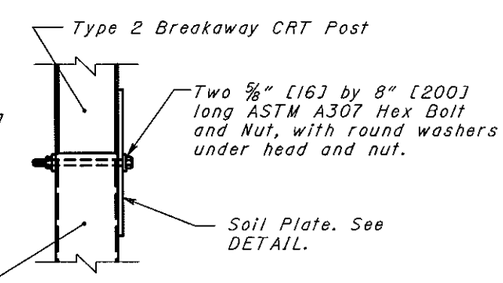

DETAIL B

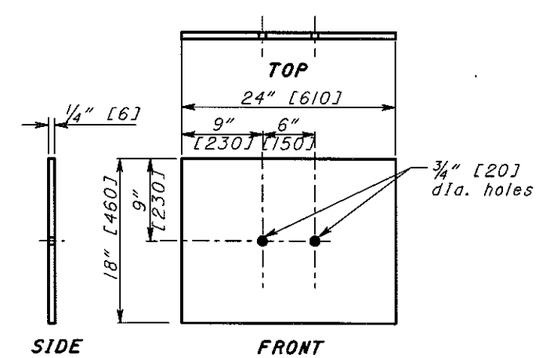

SOIL PLATE DETAIL

NOTES

APPLICATION: Use Type T Anchor Assemblies on the trailing end of guardrail runs, located outside of the clear zone of opposing traffic. The assembly is 12'-6" [3.81] long, none of which can be considered the Length of Need for the guardrail run.

For termination requirements at driveways, see DRIVEWAY OPENING Detail on Sheet 2. For side road approaches and Terminals at Structures, see **Location & Design Manual, Volume 1,** Figure 603-3.

ANCHORING OPTIONS: Contractor may choose either the foundation tube (shown on this Sheet) or the concrete footing option (Sheet 2) to construct this anchor assembly.

If the foundation tube option is chosen, the contractor will take proper care to insure that the Soil Plate fasteners are not broken during the driving process.

Concrete footings may be cast-in-place or precast. Compact fill after placing precast unit.

MATERIALS: See **SCD GR-1.1** for parts used on this anchor, including the CRT Breakaway Posts, Steel Ground Tube, Post Sleeve, Cable Anchor and Bracket Assembly.

Bearing Plate and Soil Plate is ASTM A709 Grade 36. Steel Ground Tube shall be ASTM A500, Grade B, and meet CMS 707.10. All angles, channels and plates shall meet CMS 711.01. All structural steel shall be galvanized as specified in CMS 711.02. All bolt washers indicated are standard galvanized steel of the appropriate size.

Concrete shall be class C.

Components on this anchor that are not detailed on **SCD GR-1.1** include: 1) 12'-6" [3.81 m] W-Beam Terminal Rail (standard part RWM14a), and 2) W-Beam Rounded End Section (RWE03a). For complete details and specifications, see part descriptions in the **AASHTO/AGC/ARTBA Standardized Hardware Guide.**

See **SCD GR-2.1** for Type 5 Guardrail Details.

POSTS: Post No. 2 can be W6x9 [W150x13.9] (or W6x8.5 [W150x12.9]) with notched wood blockouts.

Use of alternate posts or recycled plastic blockouts is not permitted.

PAYMENT: All labor and materials, including the W-Beam Rounded End Section and the W-Beam Terminal Rail for the 12'-6" [3.81] anchor assembly shall be included in the unit price bid for **Item 606 - Anchor Assembly, Type T, Each.**

THIS DRAWING REPLACES GR-4.2 DATED 10-17-03.

OHIO DEPARTMENT OF TRANSPORTATION
ROADWAY DESIGN ENGINEER
4-15-05
DATE

STDS. ENGR. D. Focke

All metric dimensions (in brackets [ ]) are in millimeters unless otherwise noted.

ROADWAY ENGINEERING SERVICES

STANDARD ROADWAY CONSTRUCTION DRAWING
TYPE T ANCHOR ASSEMBLY (Foundation Tube Option)

NUMBER GR-4.2