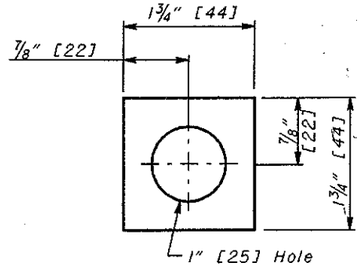

WASHER DETAIL
3/16" [5] THICK SQUARE WASHER

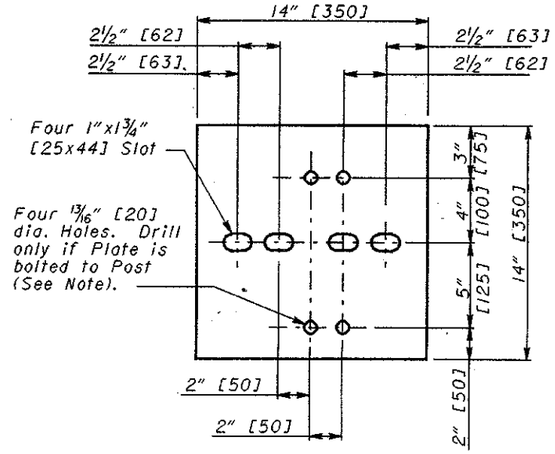

PLATE DETAIL
½" [13] THICK STEEL PLATE

Use either: 1) Concrete Insert Anchor Assembly (See Detail on **(SCD GR-1.1)**, or 2) four ⅞" [22] Anchor Bolts with washers, or 3) Expansion Shield Anchors conforming to CMS 712.01.

Bolts shall be either mechanical or set in epoxy adhesive. Length of bolt and size of hole to be determined by manufacturer's recommendation.

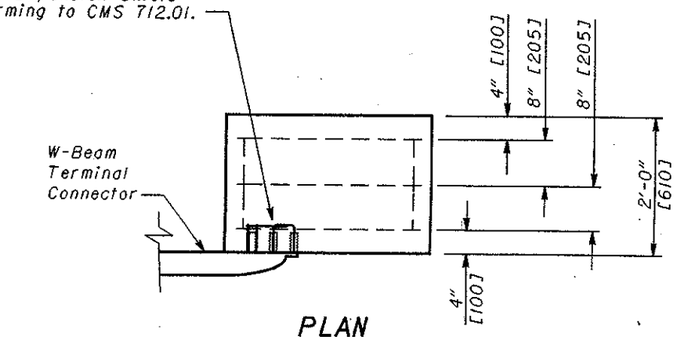

PLAN

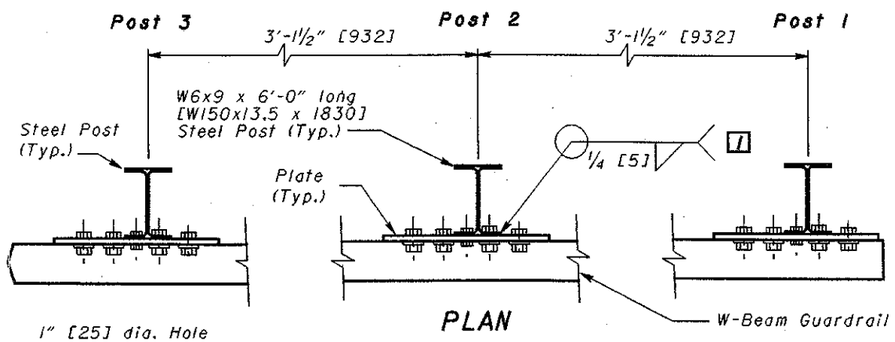

PLAN

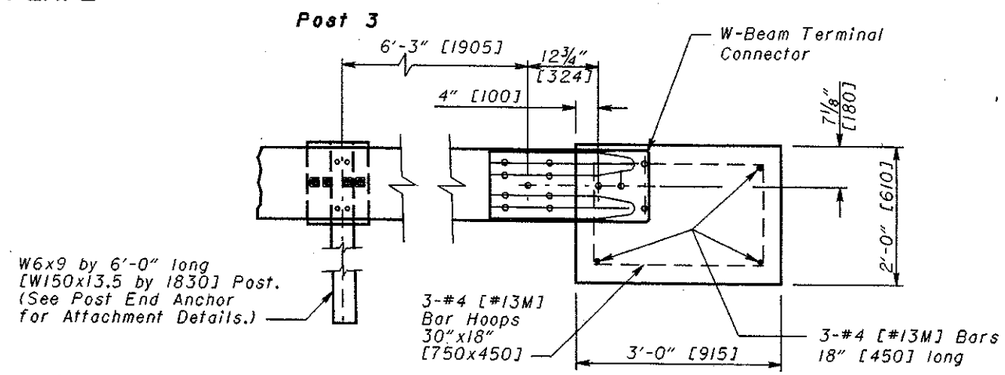

ELEVATION
CONCRETE BLOCK END ANCHOR
Posts 1 and 2 are not used in concrete option.

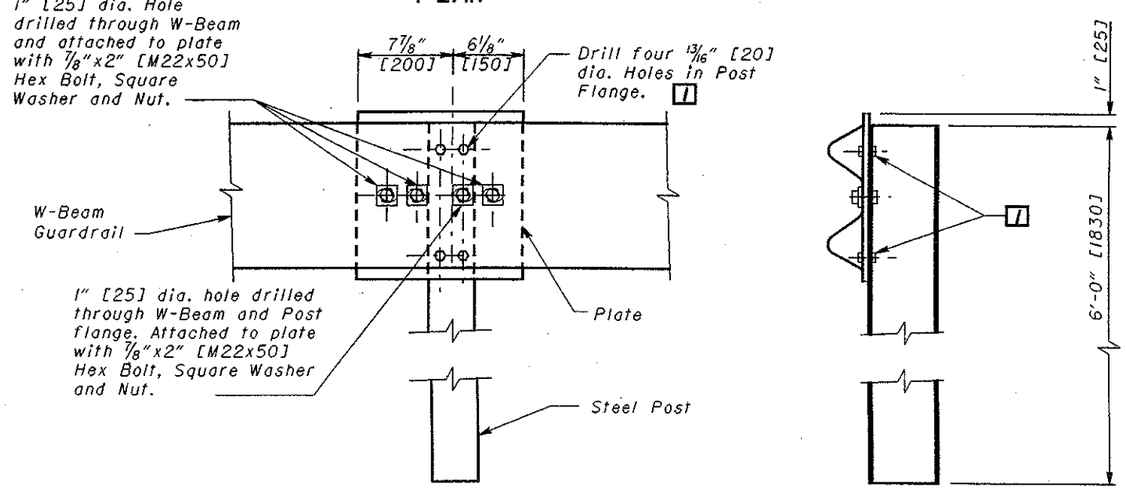

ELEVATION
POST END ANCHOR

1 The ½" [13] Steel Plate may be welded or bolted to the Post. If the Plate is bolted to the Post use four ⅝"x1½" long [16x44] Hex Head Bolts with Hex Nuts. If the Plate is welded to the Post do not drill 13/16" [20] Holes in the Plate or the Post flanges.

THIS DRAWING REPLACES GR-4.5 DATED 4-29-99.

OHIO DEPARTMENT OF TRANSPORTATION
ROADWAY DESIGN ENGINEER
4-18-03
DATE

STDS. ENGR.
D. Focke

All metric dimensions (in brackets [ ]) are in millimeters unless otherwise noted.

ROADWAY ENGINEERING SERVICES

STANDARD ROADWAY CONSTRUCTION DRAWING
GUARDRAIL TYPE 8
BURIED IN BACKSLOPE

NUMBER
GR-4.5

3/3