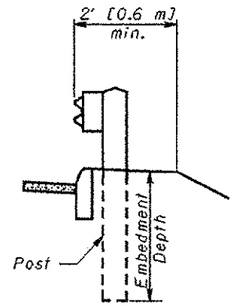

DETAIL A
See POST EMBEDMENT DEPTH Note

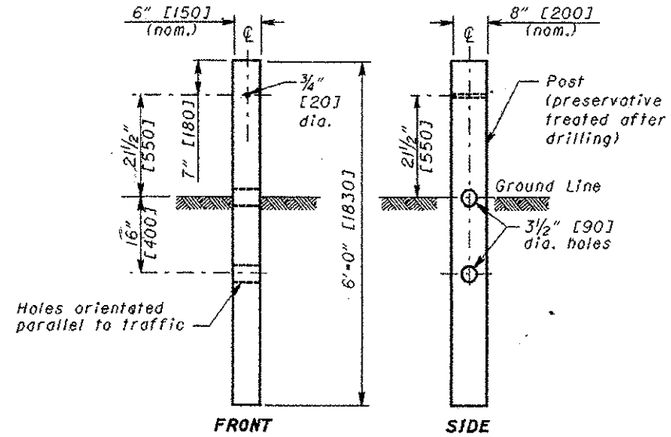

TYPE 1 BREAKAWAY CRT POST

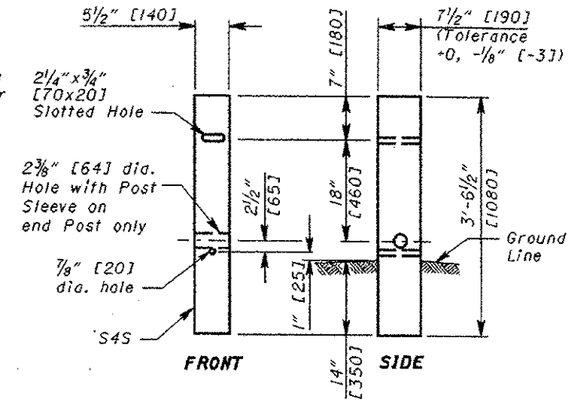

TYPE 2 BREAKAWAY CRT POST

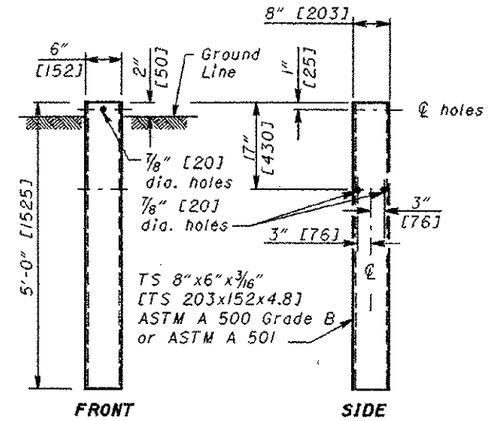

STEEL GROUND TUBE

NOTES

GUARDRAIL HEIGHT: For initial installation, construct the guardrail within ± 1" [25] of the standard height, h, or 27 3/4" [706] to the top of W-Beam rail. (See MEASURING GUARDRAIL HEIGHT Detail.) When subsequent projects, such as resurfacings, affect the height of existing guardrail, the finished height is to be within ±3" [75] of the standard height.

POST EMBEDMENT DEPTH: Where less than 2' [0.6 m] of graded shoulder shoulder width (10:1 or flatter) exists, measured from from the face of the guardrail (see DETAIL "A"), use longer posts so that a minimum of 5'-5" [1.65 m] embedment depth is provided. Payment for the longer posts will be made at the unit price bid for **Item 606 - Guardrail Post, 9' [2.75 m], Each.**

SPECIAL POST MOUNTINGS: Install posts located over a drainage inlet or structure as shown in the FOOTING ANCHOR Detail, or anchor per the details shown on **SCD GR-2.2.**

Install posts located over a footing with a cover of less than 2'-6" [0.75 m] with a footing anchor as detailed here. (A plate, as detailed on SECTION B-B of **SCD GR-2.2,** may be used as an alternative attachment method.) Where the cover is between 2'-6" [0.75 m] and 3'-5" [1.04 m], the footing anchor may be omitted and the post encased instead with 4" [100] (min.) of concrete.

Do not drive posts located over a culvert with less than 4'-3" [1.3 m] of cover; instead set in drilled or dug holes. Where the available post embedment depth is less than 3'-5" [1.04 m], encase the post with a minimum of 4" [100] concrete.

All costs associated with special post mountings are included in the unit price bid for Item 606 Guardrail of the type specified in the plans.

ANCHORS: Holes and grouting shall comply with CMS 510. Use either cement or nonshrink, nonmetallic grout.

Expansion shield anchors as specified in CMS 712.01 may be substituted except where concrete deterioration has occurred, as determined by the Engineer. Where self-drilling anchors are used, drill the holes with the expansion shield (not by a drill bit) and install the shield flush with the concrete surface.

PROTECTIVE COATING: In lieu of the complying with CMS 710.06, coat expansion shields, anchors and concrete insert anchor assemblies embedded in concrete in accordance with ASTM A 153 or be of stainless steel. Any bolts screwed into these devices shall meet CMS 710.06. (See sheet 3 for Concrete Insert Anchor Assembly Detail.)

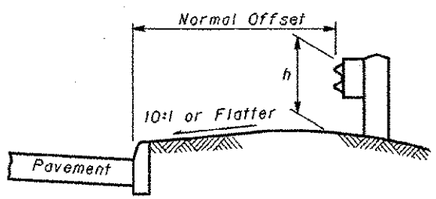

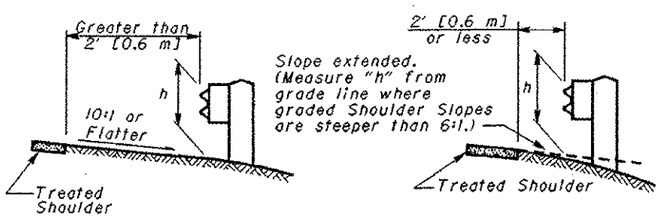

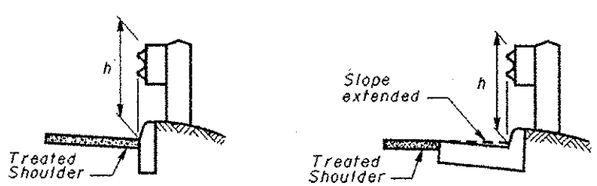

h = Standard Height (See GUARDRAIL HEIGHT Note)

MEASURING GUARDRAIL HEIGHT

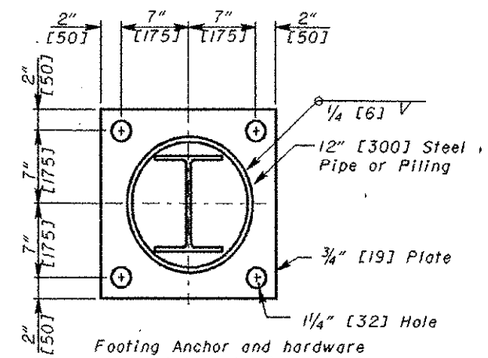

SECTION A-A

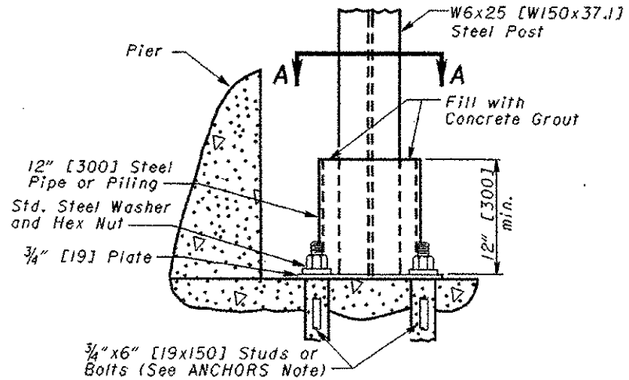

ELEVATION
FOOTING ANCHOR
See SPECIAL POST MOUNTINGS Note.

THIS DRAWING REPLACES GR-1.1 DATED 4-18-03.

OHIO DEPARTMENT OF TRANSPORTATION
7-16-04
DATE
ROADWAY DESIGN ENGINEER
STDS. ENGR. D. Focke
All metric dimensions (in brackets [ ]) are in millimeters unless otherwise noted.
ROADWAY ENGINEERING SERVICES
STANDARD ROADWAY CONSTRUCTION DRAWING
GUARDRAIL DETAILS (Posts)
NUMBER GR-1.1
2/3