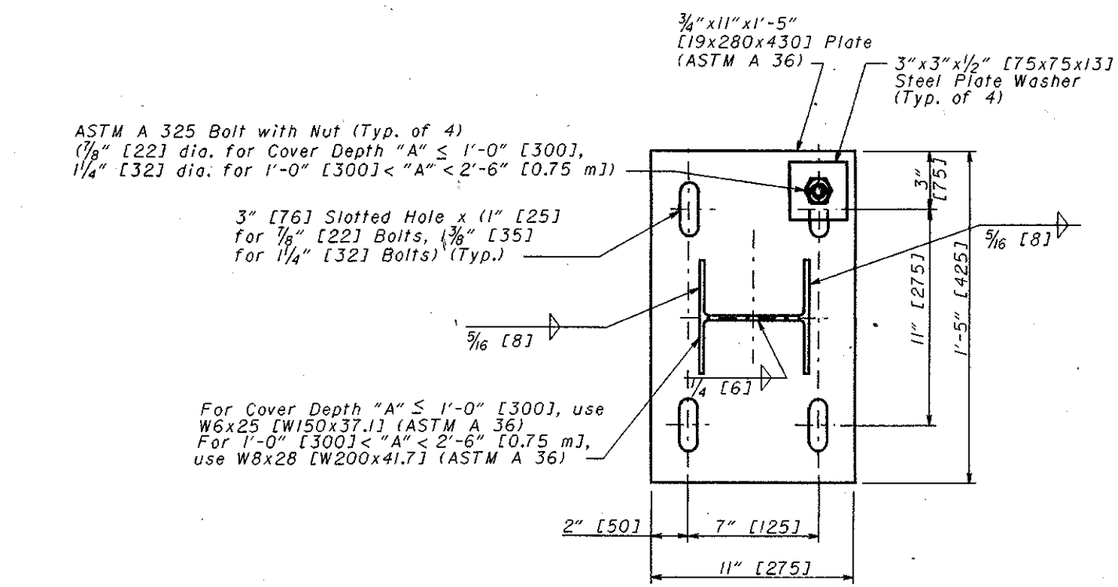

SECTION B-B

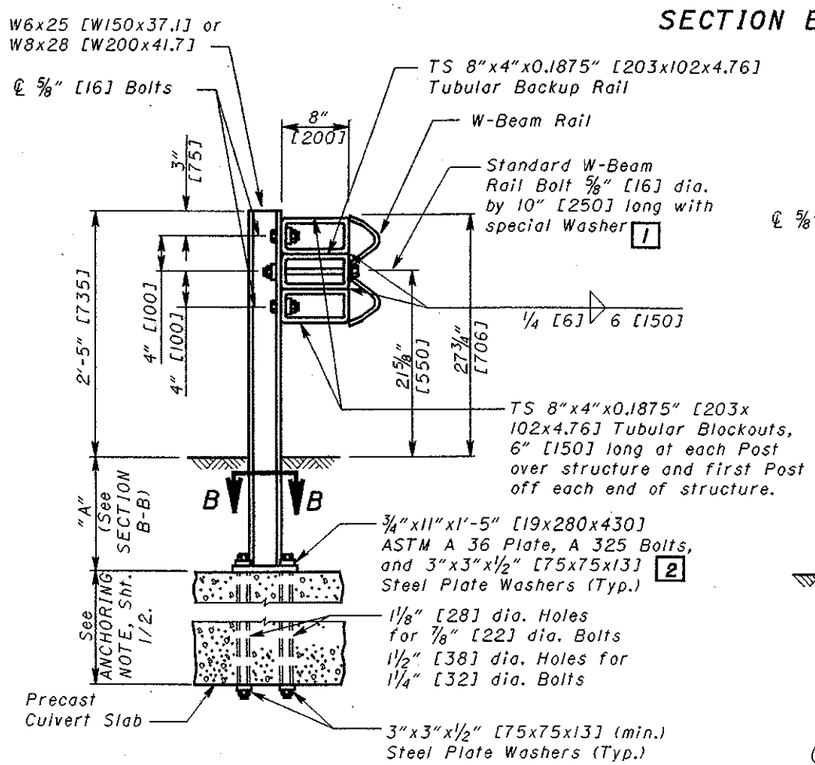

COVER DEPTH LESS THAN 2'-6" [0.75 m]

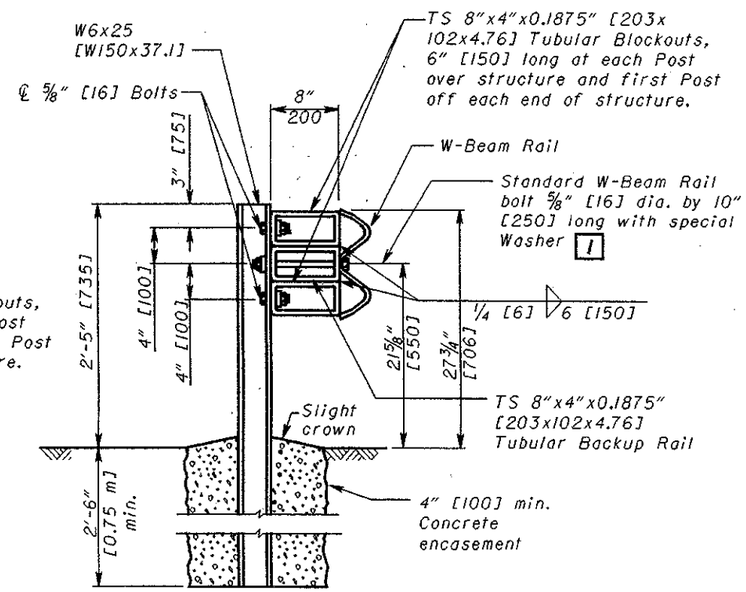

COVER DEPTH EQUAL TO OR GREATER THAN 2'-6" [0.75 m], BUT LESS THAN 3'-5" [1.04 m]

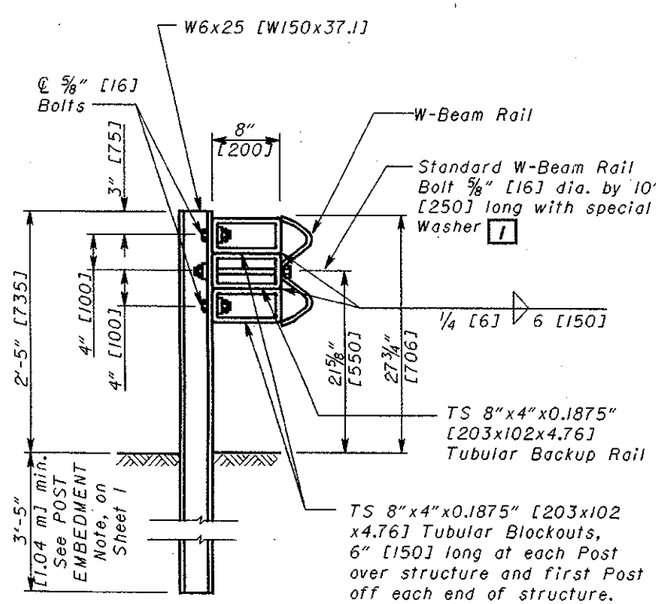

COVER DEPTH GREATER THAN OR EQUAL TO 3'-5" [1.04 m]

METHODS FOR ANCHORING POSTS

LEGEND

1 For details of special washer, see AASHTO M 180.

2 Embed plate in sealant as per Federal Specification TT-S-00230C, Type II.

THIS DRAWING REPLACES GR-2.2M DATED 10-21-97.

OHIO DEPARTMENT OF TRANSPORTATION	4-18-03 DATE
ROADWAY DESIGN ENGINEER	
STDS. ENGR. D. Focke	
All metric dimensions (in brackets [ ]) are in millimeters unless otherwise noted.	
ROADWAY ENGINEERING SERVICES	
STANDARD ROADWAY CONSTRUCTION DRAWING	GUARDRAIL TYPE 5 WITH TUBULAR BACKUP
NUMBER GR-2.2	2/2