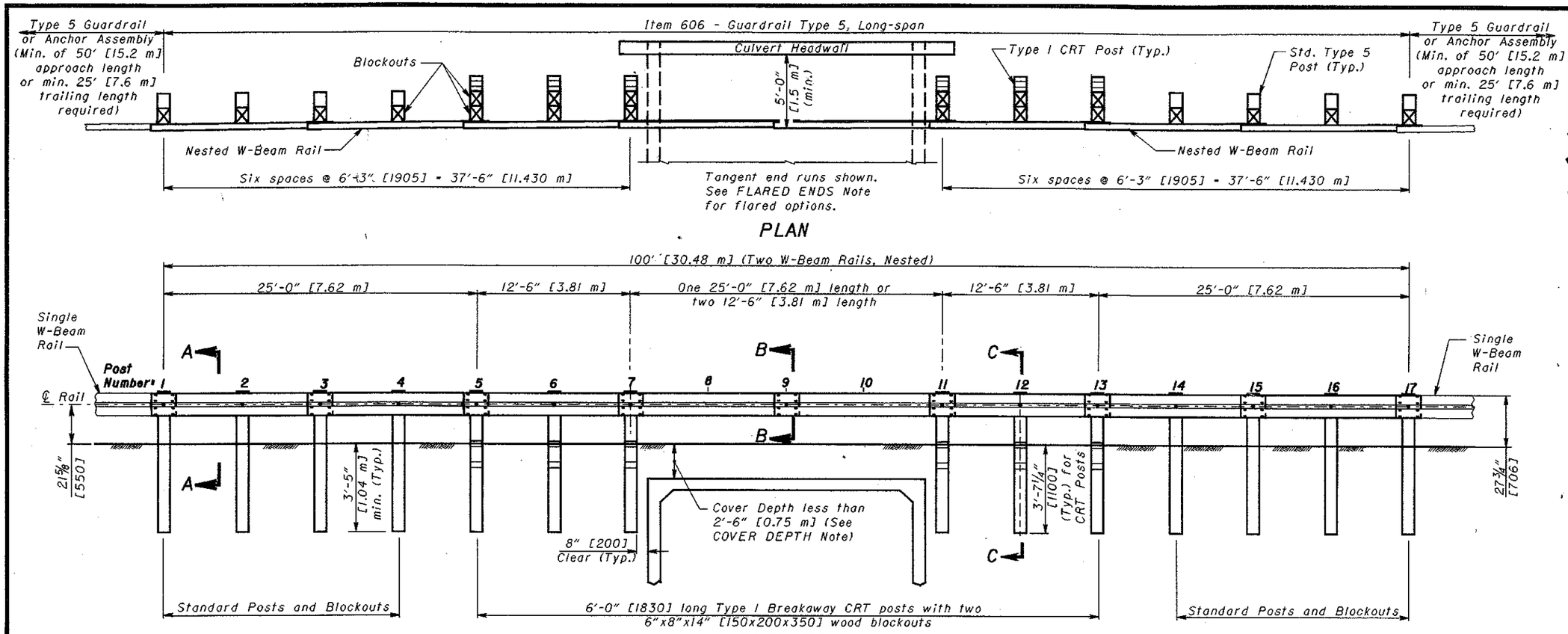

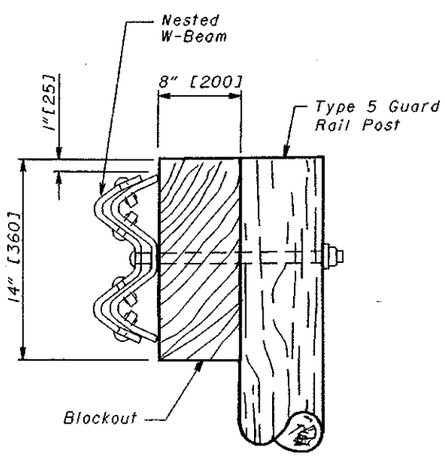

SECTION A-A

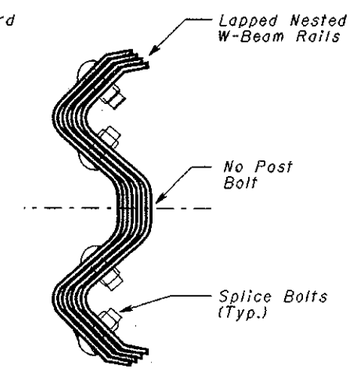

RAIL SPLICE
SECTION B-B

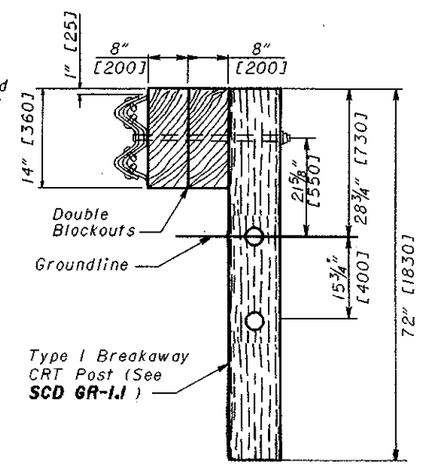

SECTION C-C

NOTES

APPLICATION: This drawing details the 25'-0" [7.62 m] Long-span Guardrail cross culvert option, which meets the requirements of NCHRP 350 Test Level 3.

25'-0" [7.62 m] SPAN: Posts may be eliminated such that a maximum of one rail splice is located within the unsupported length. A 25'-0" [7.62 m] length of nested W-Beam rail may be used to eliminate a splice when 12'-6" [3.81 m] long rail elements are used throughout the guardrail run.

CRT POSTS: For Details see **SCD GR-1.1.** Place holes parallel to traffic. The CRT Posts should have a 3'-7¼" [1100] embedment depth.

COVER DEPTH: This depth is measured at the locations of the missing posts. For cover depths greater than or equal to 2'-6" [0.75 m], see **SCD GR-2.2.**

FLARED ENDS: Install the system with either one or both ends flared away from the traveled way. For locations where a guardrail flare will be used, the minimum recommended length of tangent section adjacent to the unsupported length is 25' [7.62 m]. Taper rates should be as shown on **SCD GR-5.1.**

MATERIALS: All posts, blockouts, rails, and hardware shall comply with Item 606, Guardrail Type 5 as detailed on **SCD GR-2.1** except as noted. For other details not shown, see **SCD GR-1.1.**

PAYMENT: **Item 606 - Guardrail, Type 5, 25' Long-Span** is paid for in Feet [Meters] for the length specified in the plans and includes the double rail elements, blockouts, posts, and the other hardware, materials and labor required to construct the guardrail as shown.

NEW DRAWING

OHIO DEPARTMENT OF TRANSPORTATION
ROADWAY DESIGN ENGINEER
4-18-03
DATE

STDS. ENGR. D. Focke

All metric dimensions (in brackets [ ]) are in millimeters unless otherwise noted.

ROADWAY ENGINEERING SERVICES

STANDARD ROADWAY CONSTRUCTION DRAWING
25' LONG-SPAN GUARDRAIL

NUMBER GR-2.3

1/1