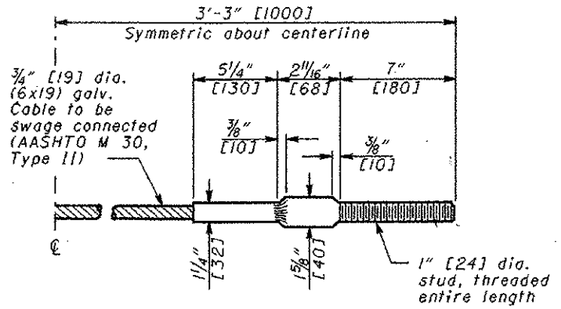

STANDARD SWAGED FITTING AND STUD

CABLE ANCHOR

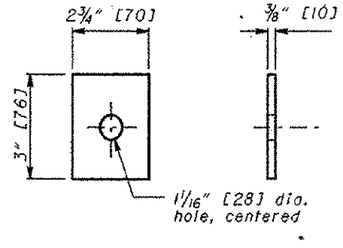

END PLATE

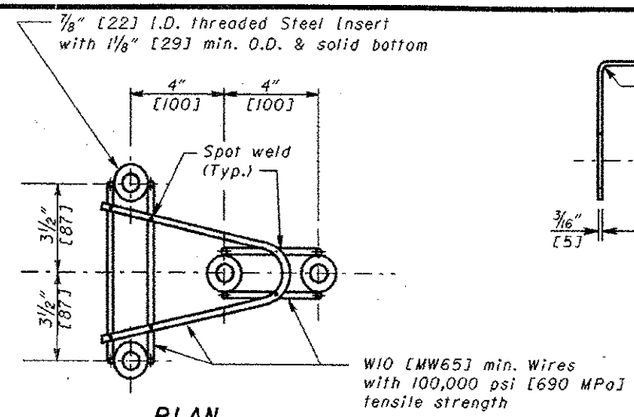

PLAN

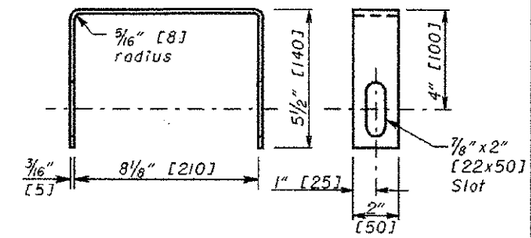

YOKE

Two required in Assembly

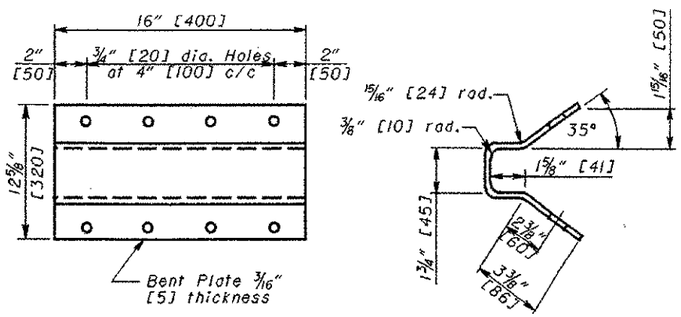

ANCHOR BRACKET

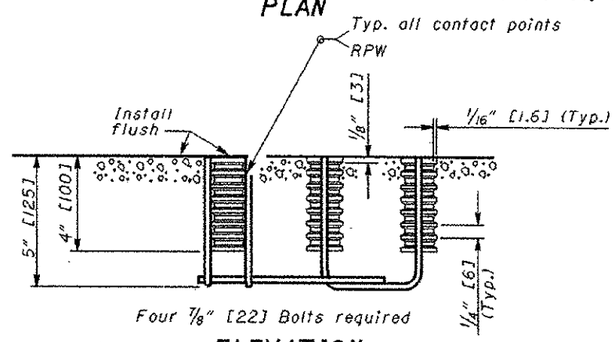

Four 7/8" [22] Bolts required

ELEVATION

CONCRETE INSERT ANCHOR ASSEMBLY (W-BEAM ONLY)

See ANCHORS and PROTECTIVE COATINGS Notes on Sheet 2

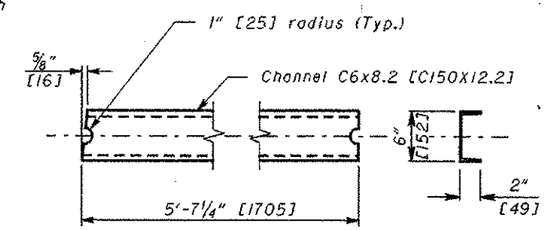

STRUT

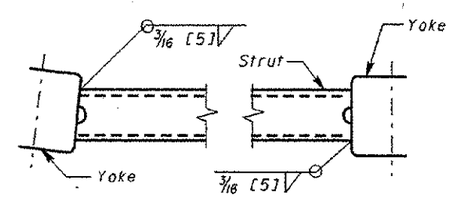

Channel legs shown down. For opposite hand, install Channel legs up.

STRUT AND YOKE ASSEMBLY

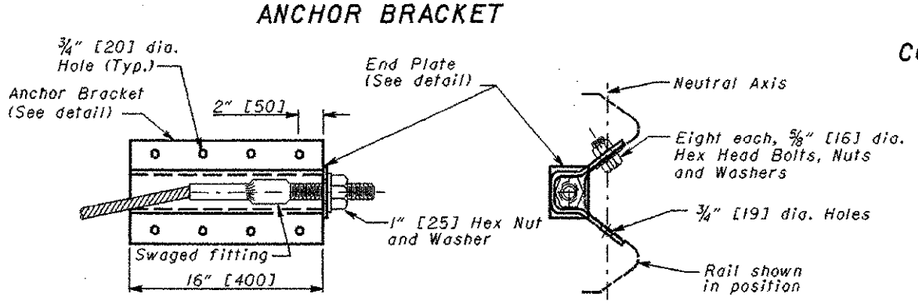

ANCHOR BRACKET ASSEMBLY DETAILS

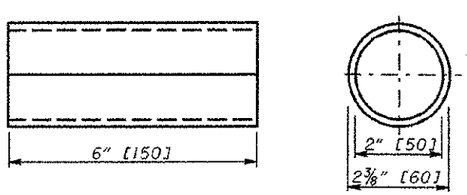

POST SLEEVE

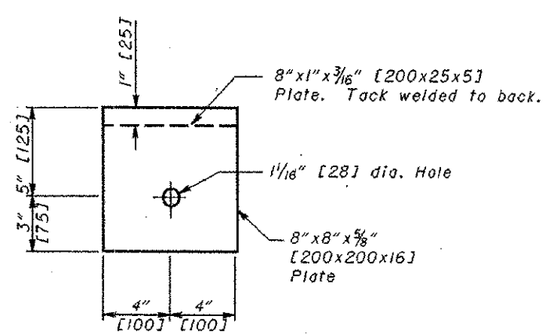

BEARING PLATE

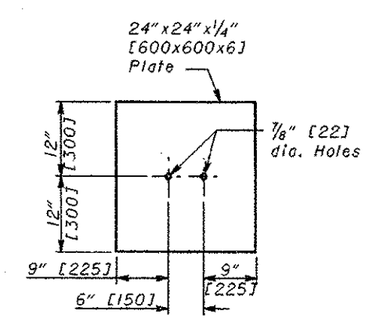

SOIL PLATE

THIS DRAWING REPLACES GR-1.1 DATED 4-18-03.

DOUG DEGRAFT DIRECTOR OF TRANSPORTATION

7-16-04 DATE

STDS. ENGR. D. FOCKE

ROADWAY DESIGN ENGINEER

All metric dimensions (in brackets [ ]) are in millimeters unless otherwise noted.

ROADWAY ENGINEERING SERVICES

STANDARD ROADWAY CONSTRUCTION DRAWING

GUARDRAIL DETAILS (Misc. Components)

NUMBER GR-1.1

3/3