NOTES

GENERAL: Components shown on this drawing are used in a variety of guardrail systems. See individual guardrail drawing for specific applications.

See CMS 606 for guardrail specifications not covered on these drawings.

Refer to AASHTO M 180 for dimensional details of W-Beam and Thrie-Beam rail elements, related buffer and end sections, beam splices, post and splice bolts, nuts, and Type I W-Beam to Thrie-Beam Transition sections.

RAIL ELEMENTS: W-Beam Rail has an effective length of 12'-6" [3.81 m], unless otherwise specified, with ¾"x2½" [19x64] post bolt slots on 6'-3" [1.905 m] centers regardless of post spacing. Field punch or drill bolt holes or slots for irregularly spaced posts as specified in CMS 606.04.

RAIL SPLICE: Lap splices between two rail elements or between a rail and terminal connector in the direction of traffic. Lap the buffer or flared end sections in the direction of traffic.

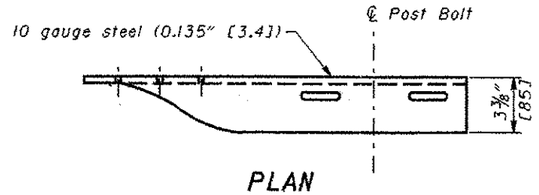

PLAN

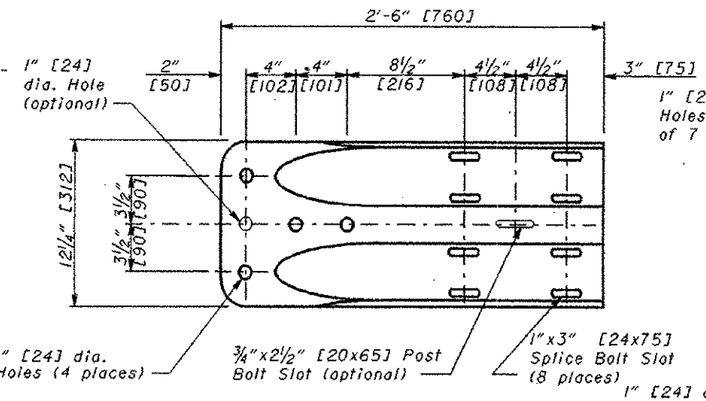

ELEVATION

W-BEAM TERMINAL CONNECTOR

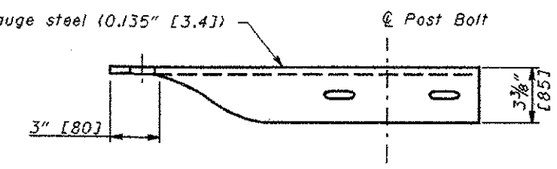

PLAN

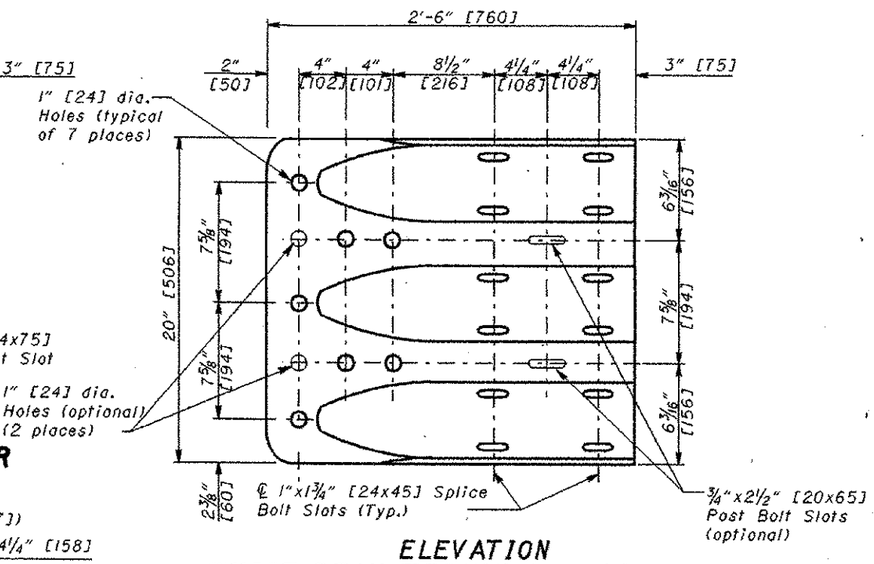

ELEVATION

THRIE-BEAM TERMINAL CONNECTOR

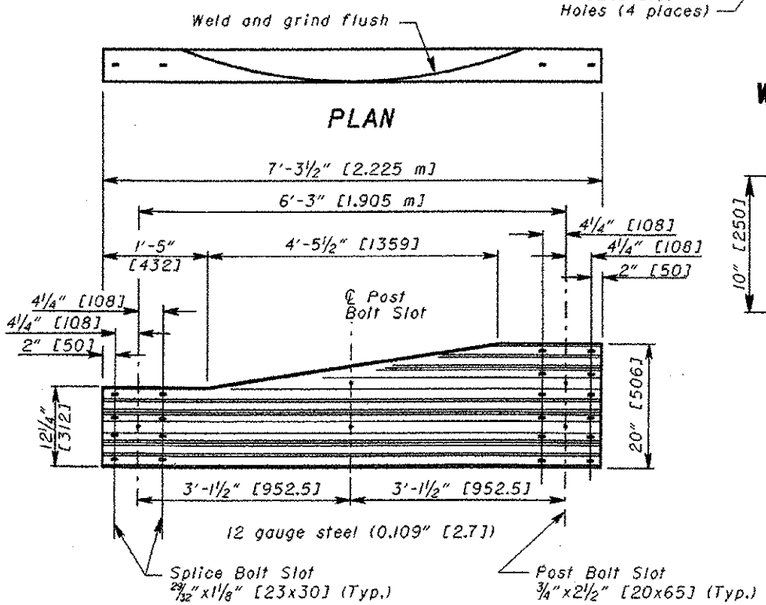

ELEVATION

TYPE 2 TRANSITION SECTION

(Asymmetric W to Thrie-Beam)

For details of Type I Transition Section (Symmetric), refer to AASHTO M 180, Figure 4.

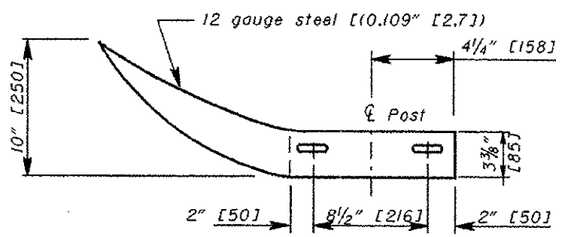

PLAN

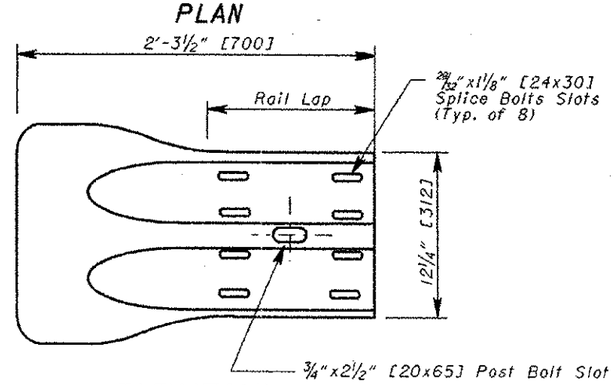

ELEVATION

W-BEAM FLARED END SECTION

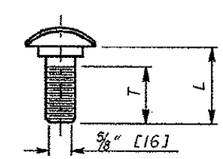

GUARDRAIL BOLT
(For Post and Splice Bolts)

L	T min.	Bolt Use
18" [460] (Standard Rail)	4" [100]	Type 5: WP/WB, PB
26" [640] (Barrier Rail)		
10" [255]	4" [100]	Type 5: SP/WB, PB
1¼" [35]	1⅛" [30]	Splice Bolt

WP= Wood Post WB= Wood Blockout
SP= Steel Post PB= Plastic Blockout
Longer Bolt may be needed for round Wood Post larger than 8" [200] dia.

THIS DRAWING REPLACES GR-1.1 DATED 4-18-03.

OHIO DEPARTMENT OF TRANSPORTATION
ROADWAY DESIGN ENGINEER
DATE 7-16-04

STDS. ENGR. D. Focke

All metric dimensions (in brackets [ ]) are in millimeters unless otherwise noted.

ROADWAY ENGINEERING SERVICES

STANDARD ROADWAY CONSTRUCTION DRAWING
GUARDRAIL DETAILS (Rail Components)

NUMBER GR-1.1

1/3