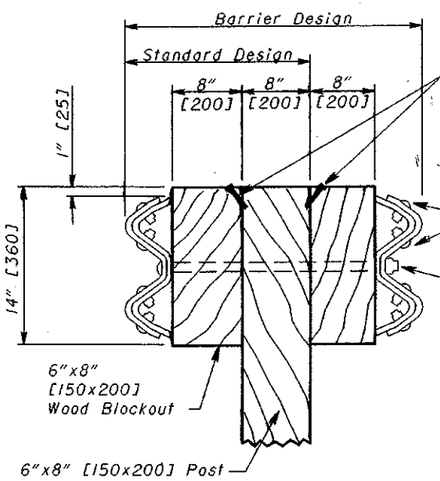

SQUARE WOOD POST

See POSTS and BLOCKOUTS Notes on Sheet 1

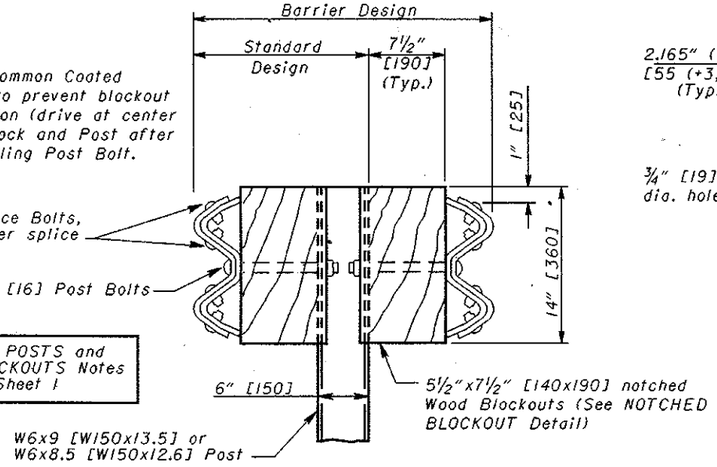

STEEL POST

See POSTS Note, Sheet 1

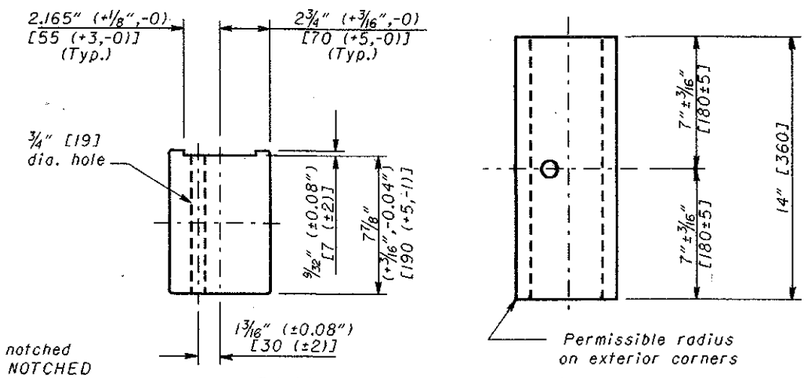

PLAN

ELEVATION

NOTCHED BLOCKOUTS FOR STEEL POSTS

See BLOCKOUTS Note on Sheet 1

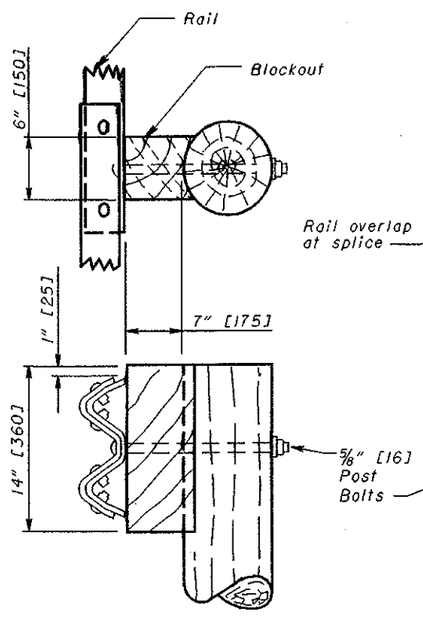

METHOD 1
Routed Blockout

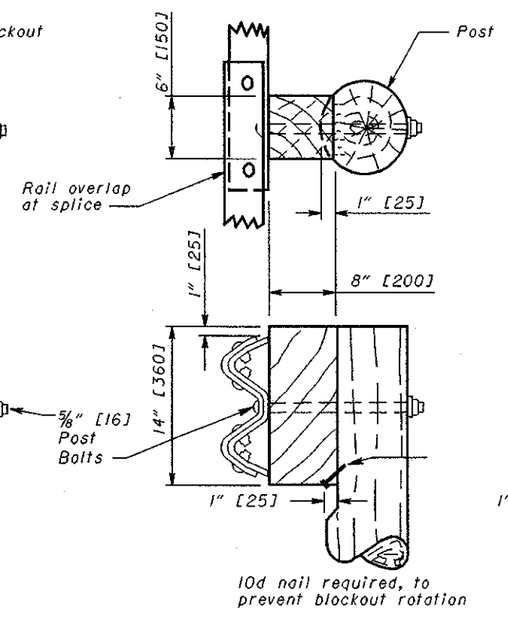

METHOD 2
Notched Post

Alternate methods of placing the Blockouts on round Posts may be submitted for consideration and approved by the Engineer.

ROUND WOOD POSTS

Single Sided runs only (Standard Design)

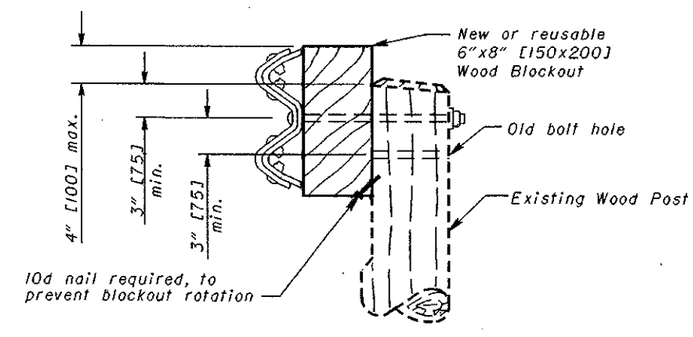

WOOD POSTS WITH WOOD BLOCK RAISING EXISTING GUARDRAIL HEIGHT

THIS DRAWING REPLACES GR-2.1 DATED 4-18-03.

OHIO DEPARTMENT OF TRANSPORTATION
ROADWAY DESIGN ENGINEER
Ray F. Fuhrer
1-16-04
DATE

STDS. ENGR. D. Focke

All metric dimensions (in brackets [ ]) are in millimeters unless otherwise noted.

ROADWAY ENGINEERING SERVICES

STANDARD ROADWAY CONSTRUCTION DRAWING

GUARDRAIL TYPE 5 & 5A

NUMBER GR-2.1

2/2