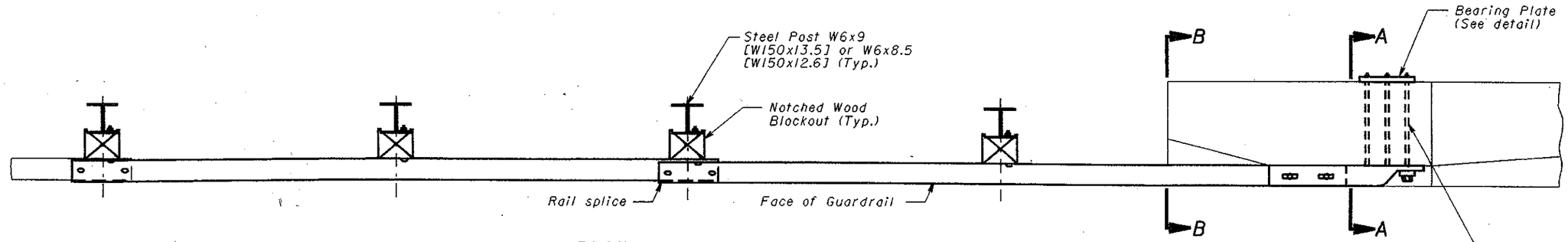

PLAN (Steel Posts shown. See POSTS Note.)

7/8" [22] dia. ASTM A 325 through bolts (length to be determined in field in accordance with Parapet width) into Bearing Plate with standard washers and hex nuts

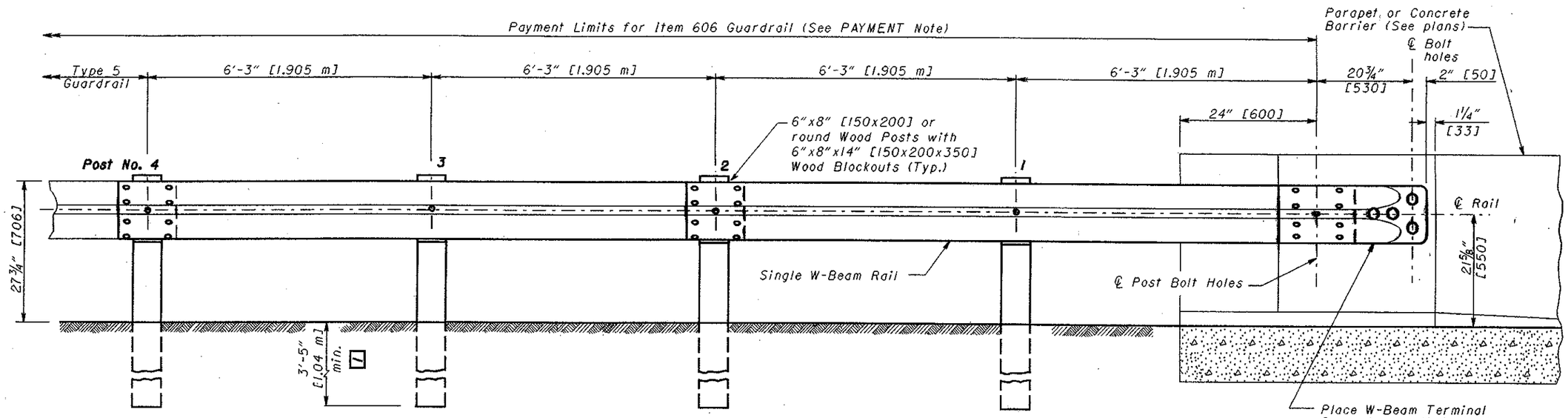

ELEVATION (Wood Posts shown. See POSTS Note.)

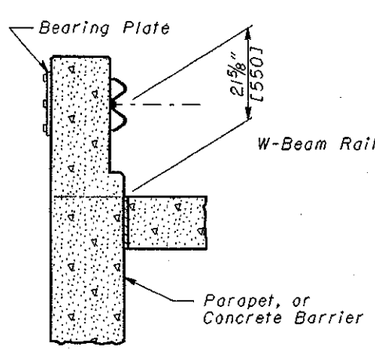

SECTION A-A

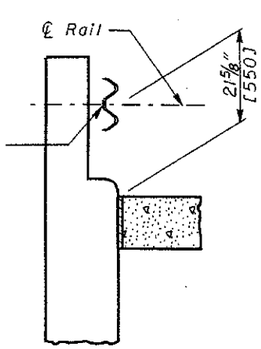

SECTION B-B

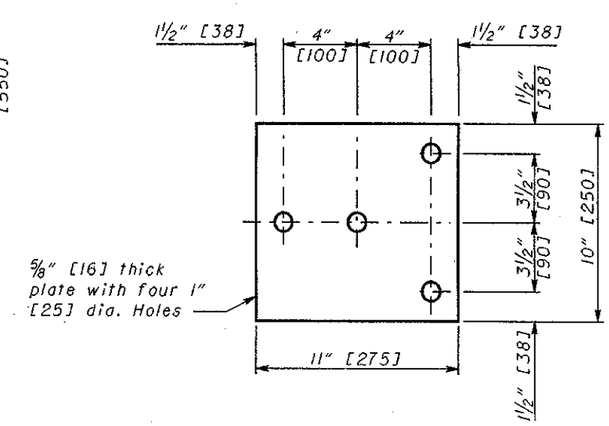

BEARING PLATE

NOTES

GENERAL: For additional rail and post details, see **SCD GR-1.1.**

APPLICATION: Use Type 2 Bridge Terminal Assembly to connect guardrail runs to the trailing end of Parapets or Concrete Barriers (see **SCD RM-4.6** for barrier) on one-directional roadways. Do not use if located within clear zone of opposing traffic.

POSTS: Posts shall be of standard size and material specified for the appropriate type of guardrail to be installed leaving the bridge or barrier. For Type 5 guardrail, see **SCD GR-2.1.**

BLOCKOUTS: Use Wood Blockouts only. Steel or plastic blockouts are not permitted.

FLARED GUARDRAIL: Begin Standard Guardrail Flares as shown on **SCD GR-5.1,** preferably at or beyond Post No. 4; however, the flare may begin at Post No. 2.

PAYMENT: **Item 606 - Bridge Terminal Assembly, Type 2, Each.** includes the cost of extra components, in excess of normal guardrail, for the Terminal connector, Bearing Plates, bolts, washers, nuts, and other hardware.

THIS DRAWING REPLACES GR-3.2M DATED 10-21-97.

OHIO DEPARTMENT OF TRANSPORTATION
ROADWAY DESIGN ENGINEER
4-18-03
DATE

STDS. ENGR. D. Focke

All metric dimensions (in brackets [ ]) are in millimeters unless otherwise noted.

ROADWAY ENGINEERING SERVICES

STANDARD ROADWAY CONSTRUCTION DRAWING

BRIDGE TERMINAL ASSEMBLY, TYPE 2

NUMBER **GR-3.2**

1/1