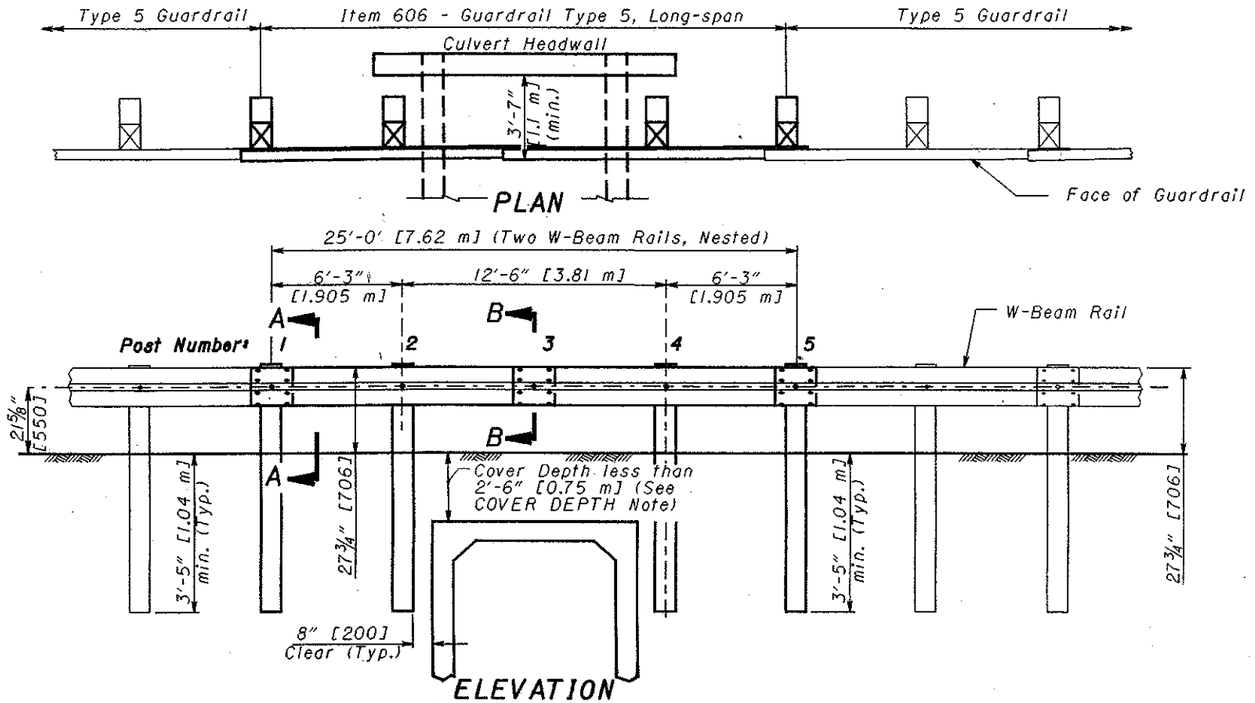

12'-6" [3.81 m] GUARDRAIL SPAN

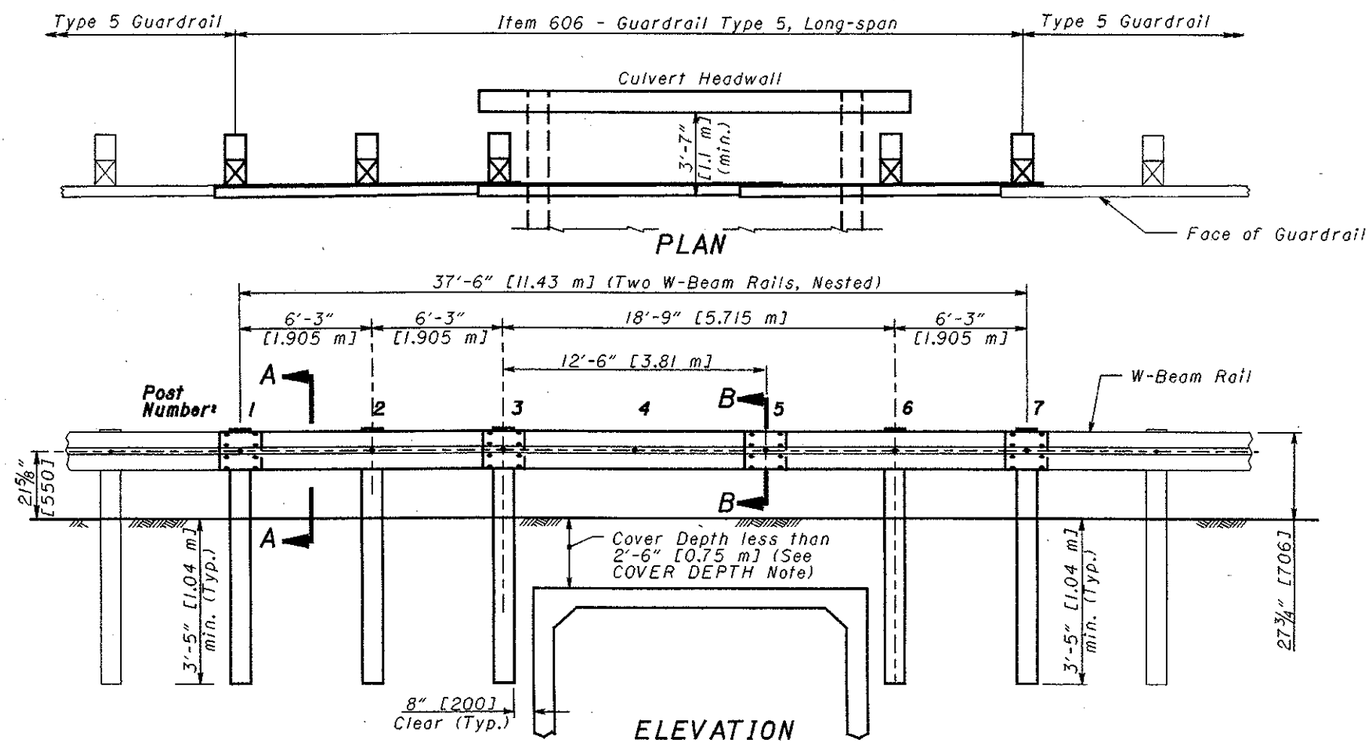

18'-9" [5.715 m] GUARDRAIL SPAN

NOTES

APPLICATION: *This drawing covers two span lengths, 12'-6" [3.81 m] to 18'-9" [5.715 m].* ***Do not use on the NHS.*** *(See* **SCD GR-2.3** *for NCHRP 350 Test Level 3 design.)*

12'-6" [3.81 m] SPAN: *The post to be eliminated must be at a rail splice location, as shown at Post No. 3. If conditions are such that the post to be eliminated would occur at a non-splice location, then the 18'-9" [5.715 m] span design should be used, eliminating Post No. 4.*

18'-9" [5.715 m] SPAN: *The posts to be eliminated may be at Post No. 4 and No. 5 (as shown) or at Post No. 3 and No. 4.*

COVER DEPTH: *This depth is measured at the locations of the missing posts. For cover depths greater than or equal to 2'-6" [0.75 m], see* **SCD GR-2.2.**

FLARED ENDS: *Install these systems with either one or both ends flared away from the traveled way. For locations where a guardrail flare will be used, the minimum recommended length of tangent section adjacent to the unsupported length is 25' [7.62 m]. Taper rates should be as shown on* **SCD GR-5.1.**

MATERIALS: *All posts, blockouts, rails, and hardware shall comply with Item 606, Guardrail Type 5 as detailed on* **SCD GR-2.1.** *For other details not shown, see* **SCD GR-1.1.**

PAYMENT: ***Item 606 - Guardrail, Type 5, Long-span*** *is paid for in Feet [Meters] for the length specified in the plans andincludes the double rail elements, blockouts, posts, and the other hardware, materials and labor required to construct the guardrail as shown.*

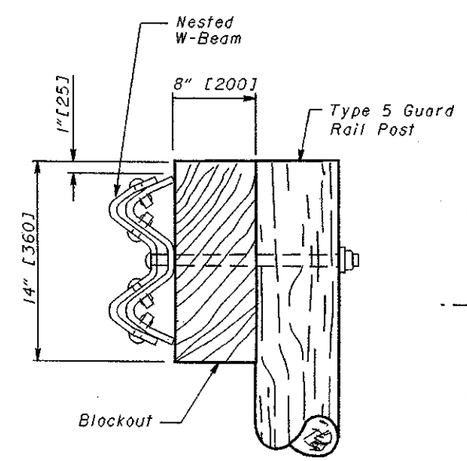

SECTION A-A

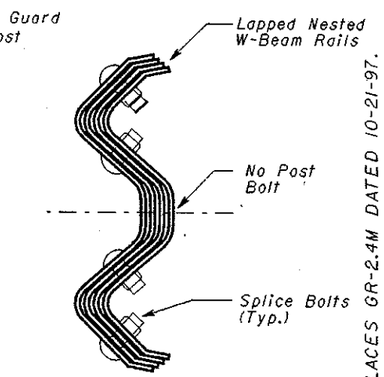

RAIL SPLICE
SECTION B-B

THIS DRAWING REPLACES GR-2.4M DATED 10-21-97.

OHIO DEPARTMENT OF TRANSPORTATION
ROADWAY DESIGN ENGINEER
4-18-03
DATE

STDS. ENGR.
D. Focke

All metric dimensions in brackets [ ] are in millimeters unless otherwise noted.

ROADWAY ENGINEERING SERVICES

STANDARD ROADWAY CONSTRUCTION DRAWING
LONG-SPAN GUARDRAIL ACROSS CULVERT

NUMBER
GR-2.4

1/1