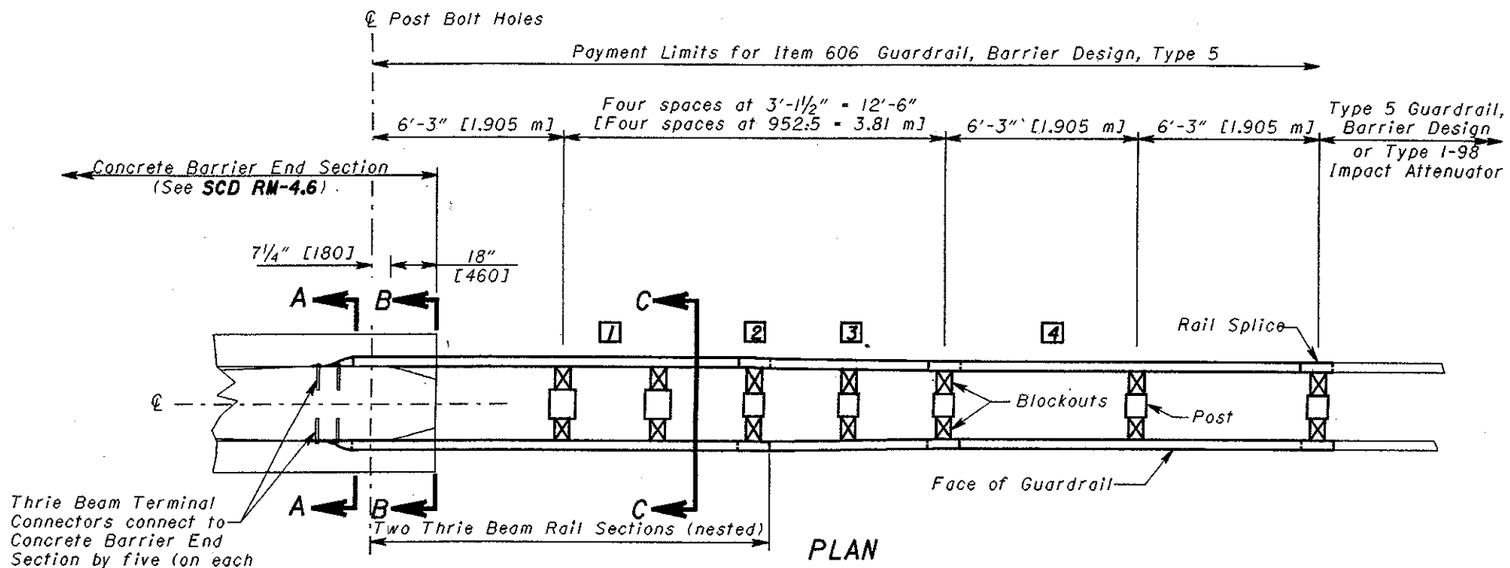

PLAN

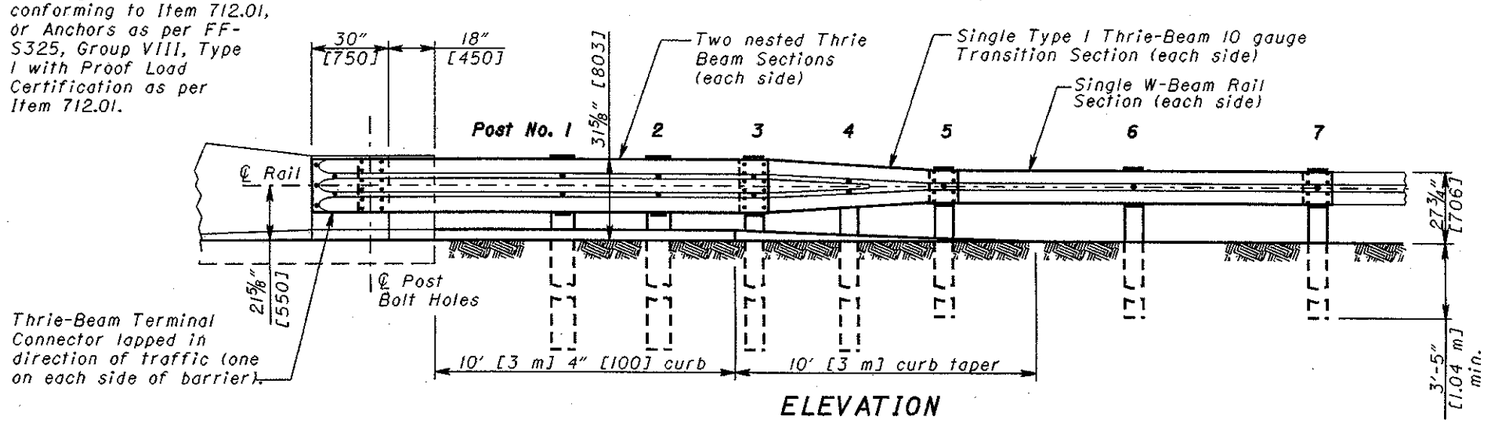

ELEVATION

NOTES

GENERAL: For additional post and rail details, see **SCD GR-1.1** and other Drawings pertaining to design of specific guardrail types. See **SCD RM-4.3** and **RM-4.6** for Concrete Barrier details.

APPLICATION: Use the Bridge Terminal Assembly, Type I, Barrier Design, to connect Type 5 Barrier Guardrail or Type I-98. Impact Attenuators to Concrete Median Barriers.

THRIE BEAM TRANSITION: Symmetrical W-Beam to Thrie Beam transition panel shall be 10 gauge.

POSTS: Posts may be set in drilled holes or driven to grade. See **SCD GR-1.1** for additional Post embedment details.

WOOD POSTS - Use square sawed pressure treated wood as per CMS 710.14 and fabricate with square ends. Bore bolt holes and trim the tops of posts, if required, after the posts are set.

STEEL POSTS - are allowed as an alternate. Use W8x24 [W200x35.9] for 10"x10" [250x250] wood posts and use W6x25 [W150x37.1] for 8"x8" [200x200] posts. Use same post material throughout assembly.

BLOCKOUTS: Use wood blockouts only, steel or plastic blockouts are not permitted. Use routed blockouts with steel posts.

CURB: Provide a Type 4-A or 4-C concrete curb minimum of 20' [6 m], or longer as shown on plans, including a 10' [3 m] taper (from curb height to flush). Front of curb to be flush with face of guardrail.

PAYMENT: Payment for the Guardrail Transition Section will be made at the unit price bid per Each for **Item 606 - Bridge Terminal Assembly, Type I, Barrier Design** and includes the extra cost, in excess of normal guardrail costs, for additional and different type Posts and Blockouts, nested Thrie Beam Sections, Terminal Connectors, Thrie Beam transition and connector sections, bolts, washers, nuts, anchors, other hardware, curb and compacted soil.

LEGEND

1. Posts 1 & 2:
   10"x10"x8'-0" [250x250x2440] Wood Post with 8"x8"x22" [200x200x550] Wood Blockouts
2. Post 3:
   8"x8"x8'-0" [200x200x2440] Wood Post with 9"x9"x22" [225x225x550] Wood Blockouts
3. Post 4:
   8"x8"x6'-0" [200x200x1830] Wood Post with 8½"x 8½"x14" [215x215x360] wood Blockouts
4. Posts 5 & 6:
   8"x8"x6'-0" [200x200x1830] Wood Post with 8"x8"x14" [200x200x360] Wood Blockouts

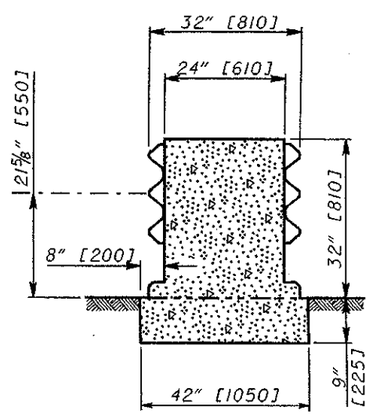

Reinforcing not shown.

SECTION A-A

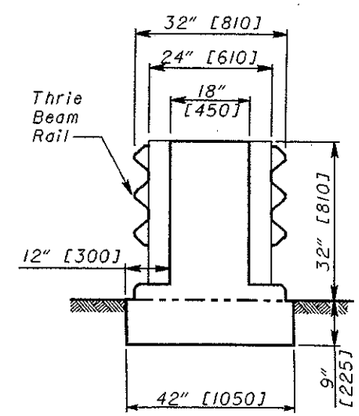

VIEW B-B

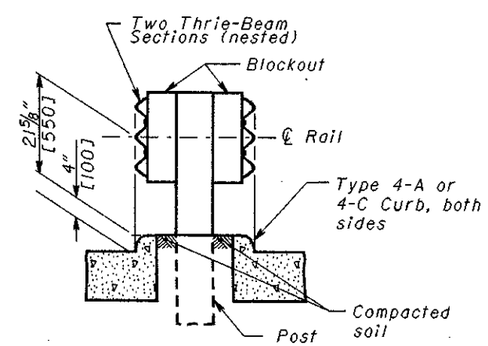

Front of curb to be flush with face of guardrail.

SECTION C-C

THIS DRAWING REPLACES GR-3.5M DATED 10-21-97.

OHIO DEPARTMENT OF TRANSPORTATION	4-18-03 DATE
ROADWAY DESIGN ENGINEER	
STDS. ENGR. D. Focke	
All metric dimensions (in brackets [ ]) are in millimeters unless otherwise noted.	
ROADWAY ENGINEERING SERVICES	
STANDARD ROADWAY CONSTRUCTION DRAWING	BRIDGE TERMINAL ASSEMBLY, TYPE I, BARRIER DESIGN
NUMBER GR-3.5	1/1