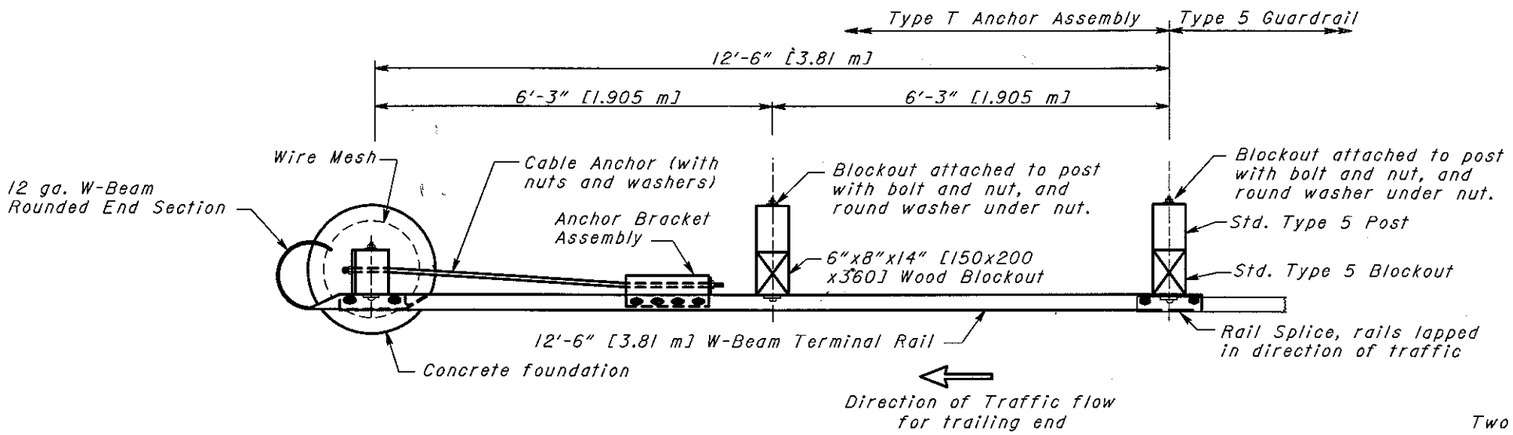

PLAN

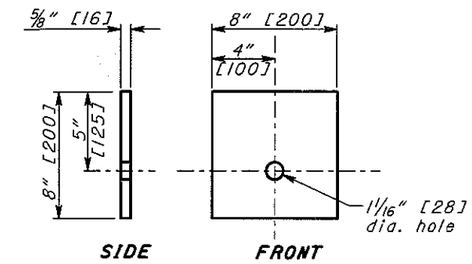

BEARING PLATE DETAIL

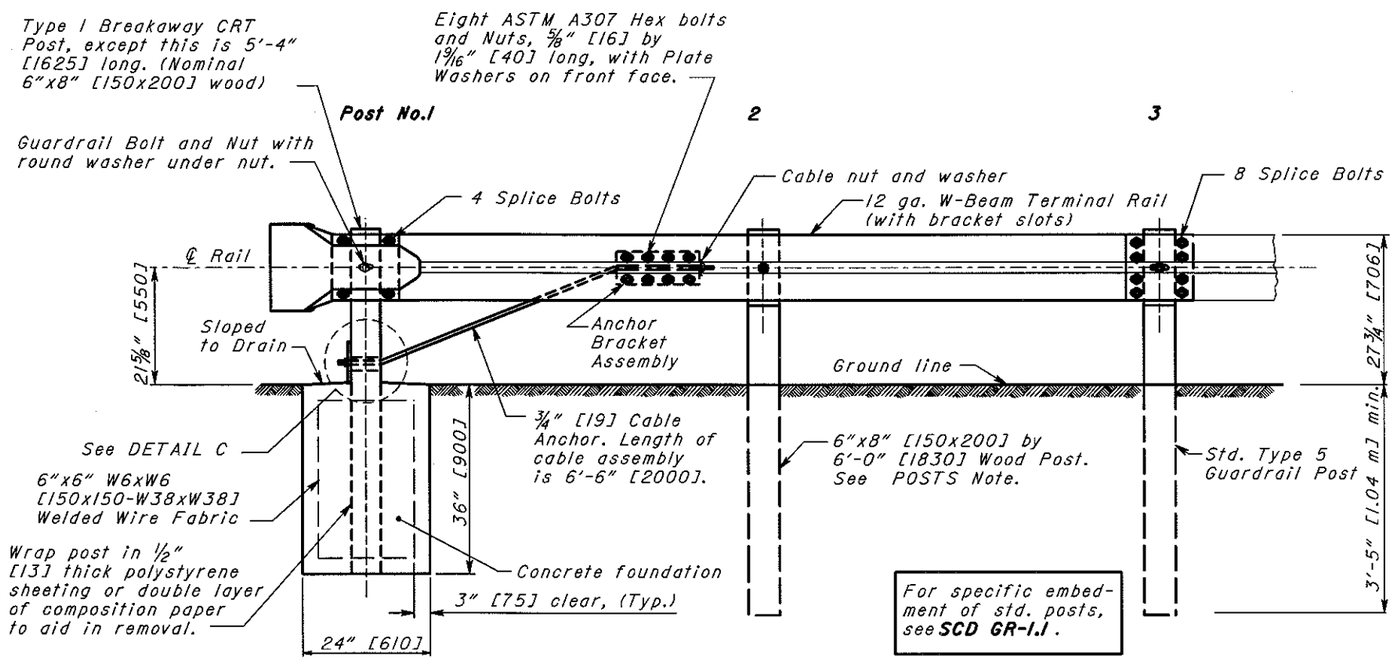

See **SCD GR-1.1** for Type I Breakaway CRT Post, Steel Ground Tube, Post Sleeve, Cable Anchor and Bracket Assembly details.

ELEVATION - CONCRETE FOOTER

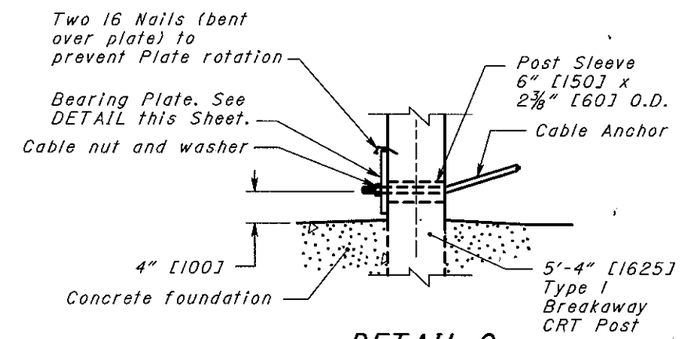

DETAIL C

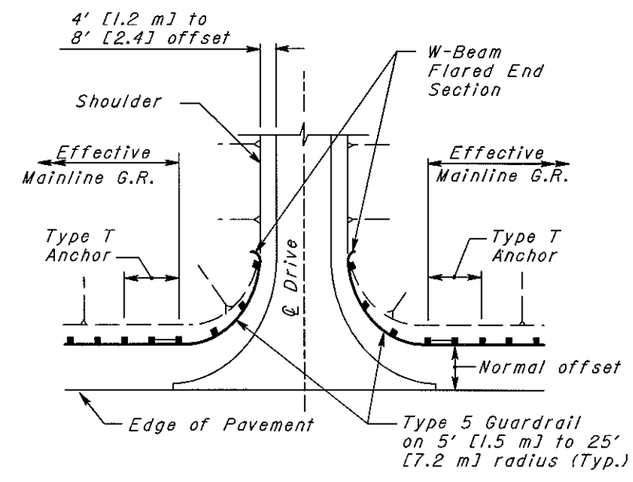

DRIVEWAY OPENING

THIS DRAWING REPLACES GR-4.2 DATED 10-17-03.

OHIO DEPARTMENT OF TRANSPORTATION — DATE 4-15-05

ROADWAY DESIGN ENGINEER

STDS. ENGR. D. Focke

All metric dimensions (in brackets [ ]) are in millimeters unless otherwise noted.

ROADWAY ENGINEERING SERVICES

STANDARD ROADWAY CONSTRUCTION DRAWING

TYPE T ANCHOR ASSEMBLY (Concrete Footer Option)

NUMBER **GR-4.2**

2/2