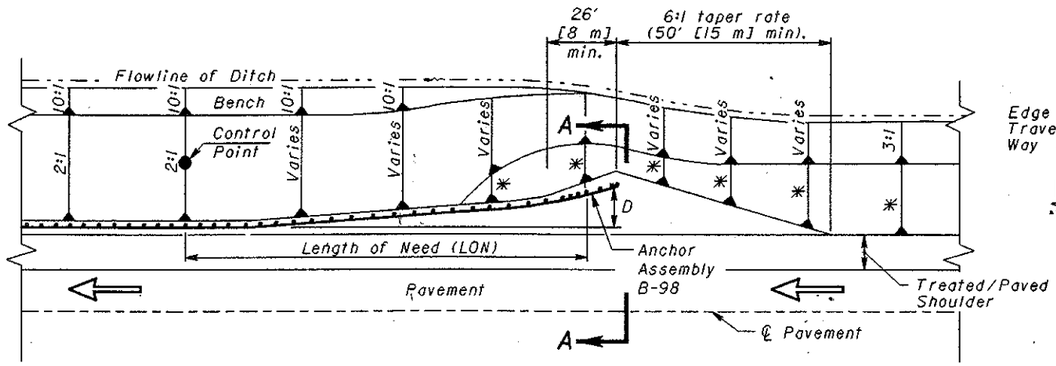

FILL TO FILL

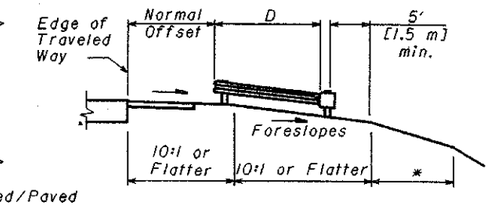

SECTION A-A

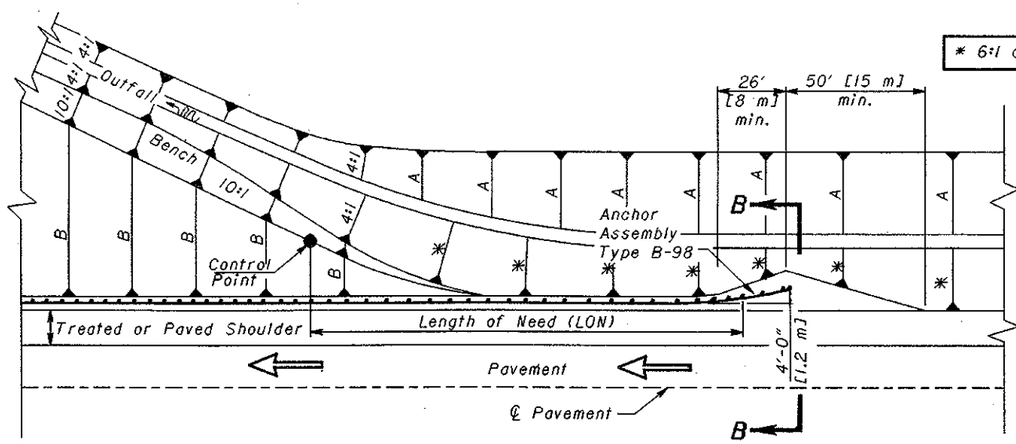

CUT TO FILL

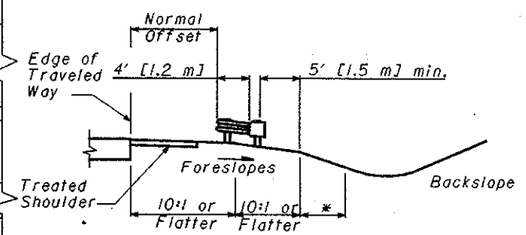

SECTION B-B

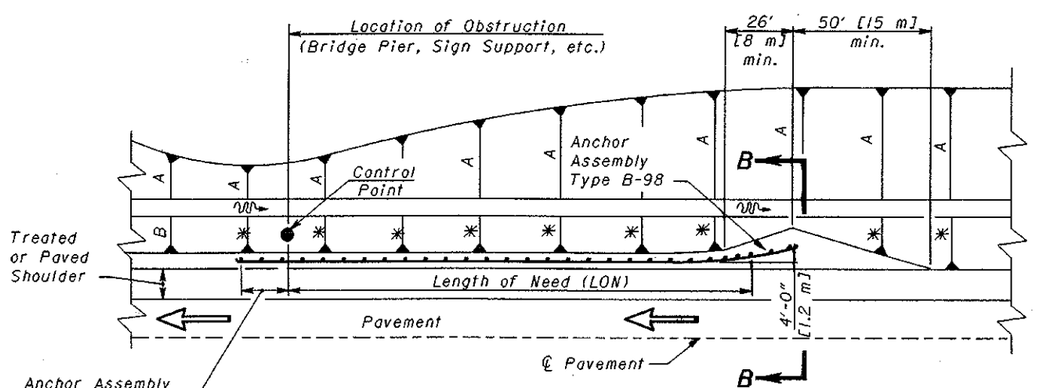

OBSTRUCTION

The installation shown is applicable for one-directional roadways only.
(For Obstructions in Fill Conditions, use above details)

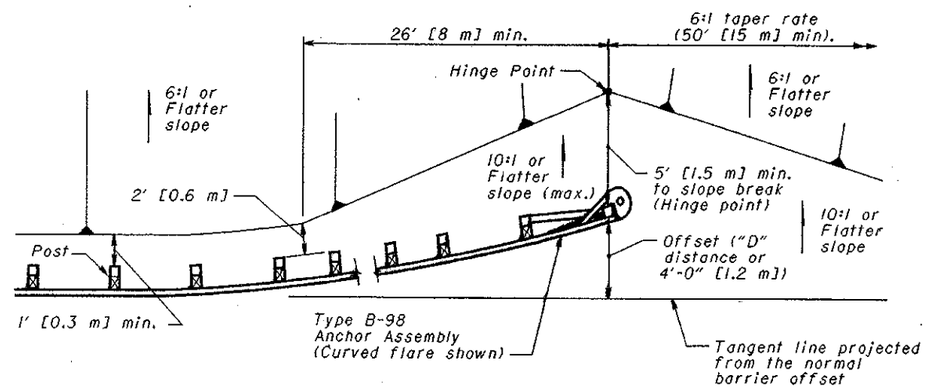

GRADING PLAN FOR
FLARED ANCHOR ASSEMBLIES

Flared Anchor Assemblies are considered gating terminals, and thus, an area 20' [6 m] by 75' [22 m] behind and beyond should be resonably traversable and free from fixed objects hazards.

NOTES

APPLICATION: Utilize details shown here only where approach foreslopes are 6:1 or flatter.

SLOPES: Slopes designated by * are 6:1 or flatter. Construct slopes labeled "A" or "B" as specified in the plans.

DISTANCES: The Length of Need, LON, represents the distance from the control point to the beginning of the end treatment. "D" is the lateral offset of the flare.
See **SCD GR-5.1** for additional details on guardrail flares. The control point shown designates the extent of the hazard being shielded and is shown for design use only. See **Location & Design Manual, Volume 1,** Section 602, for more information.

GRADING: The Anchor Assembly shown requires proper grading to function properly. See GRADING PLAN FOR FLARED ANCHOR ASSEMBLIES for more information.

ANCHOR ASSEMBLY: Install Type B-98 Anchor Assemblies according to the Manufacturer's instructions. Products are install either on a curved flare or straight flare.

THIS DRAWING REPLACES GR-5.2 DATED 4-18-03.

OHIO DEPARTMENT OF TRANSPORTATION
ROADWAY DESIGN ENGINEER
DATE 1-16-04

STDS. ENGR. D. Focke

All metric dimensions (in brackets [ ]) are in millimeters unless otherwise noted.

ROADWAY ENGINEERING SERVICES

STANDARD ROADWAY CONSTRUCTION DRAWING
INTRODUCTION OF GUARDRAIL RUNS
Foreslope 6:1 or Flatter

NUMBER GR-5.2

1/1