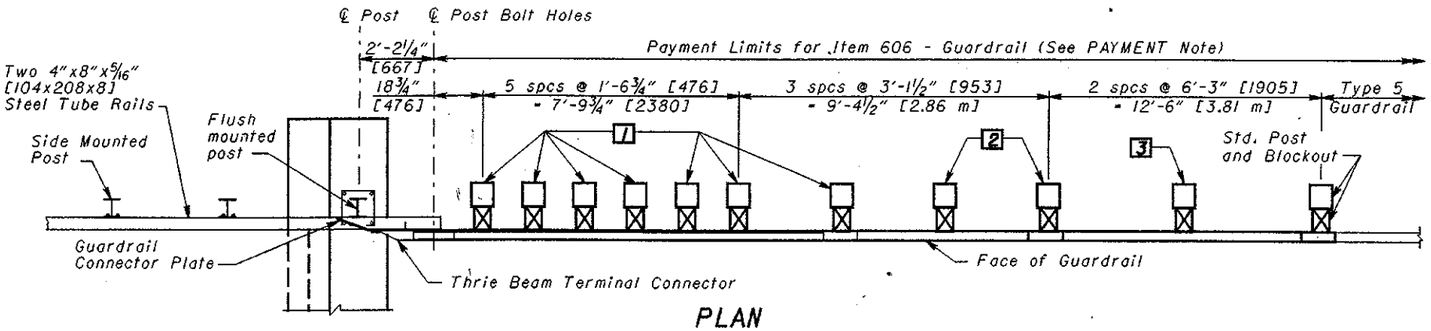

PLAN

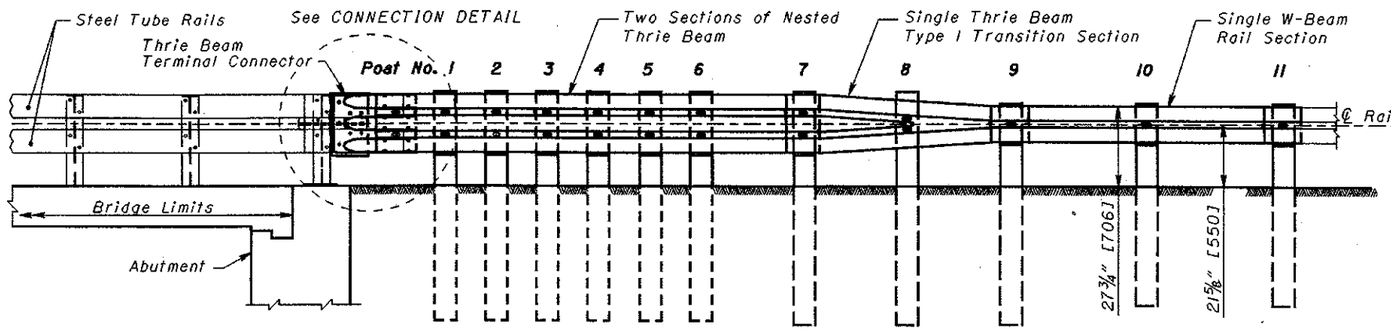

ELEVATION

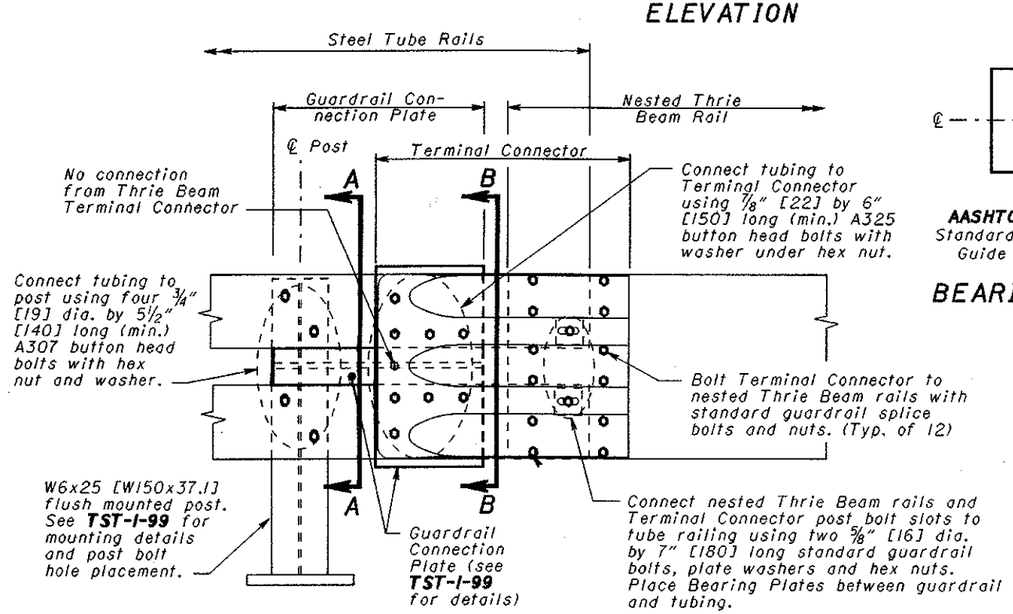

CONNECTION DETAILS

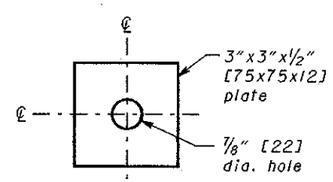

AASHTO/AGC/ARTBA
Standardized Hardware Guide part FWR09

BEARING PLATE

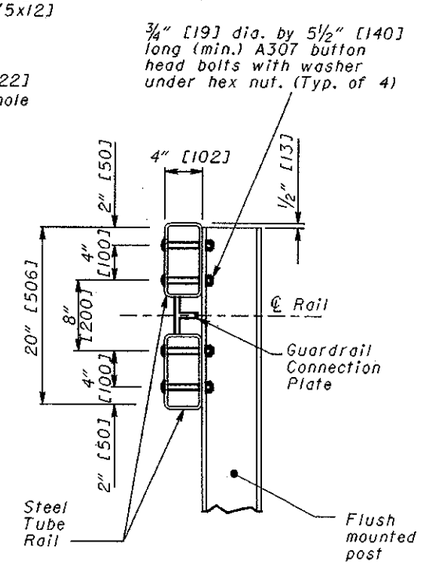

SECTION A-A
Section through Tubing at Post

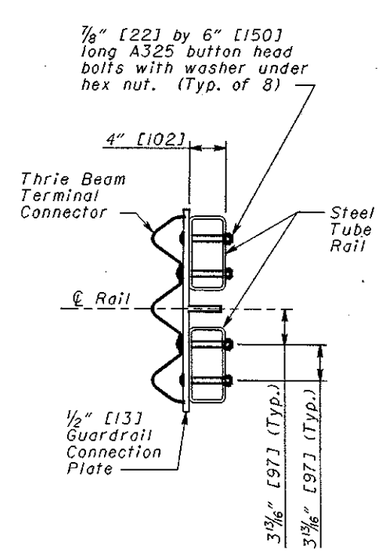

SECTION B-B
Section through Tubing at Terminal Connector

NOTES

GENERAL: For additonal guardrail details, including Thrie Beam Terminal Connector, see **SCD's GR-1.1.**

APPLICATION: The Type TST Bridge Terminal Assembly shall be used to connect guardrail runs to both the approach and trailing ends of twin steel tube bridge railings.

See **Structural Engineering's SCD TST-1-99.** for Flush Mounted post and Guardrail Connection Plate and tubing details, (including tubing bolt hole placement).

POSTS: Posts may be set in drilled holes or driven to grade.

WOOD POSTS shall be square, sawed pressure treated wood per CMS 710.14 and fabricated with square ends. Bolt holes shall be bored and tops of posts trimmed, if required, after posts are set.

STEEL POSTS: W6x9 [W150x13.5] (or W6x8.5 [W150x12.9]) posts may be substitued for 6x8 [150x200] wood posts. Notched wood blockouts, as shown on **SCD GR-2.1,** (except 22" [550] long for posts 1 thru 7), are to be used with steel posts. Plastic blockouts are not permitted.

PAYMENT: Item 606 - Bridge Terminal Assembly, Type TST, Each, shall include the extra cost, in excess of normal guardrail costs, for additional and different type posts and blockouts, nested Thrie Beam sections, Transition sections, Terminal Connector, bearing plates, bolts, nuts, washers and other hardware.

LEGEND

1. Posts 1 thru 7:
   6"x8"x6'-6" [150x200x1980] Wood Posts with
   6"x8"x22" [150x200x550] Wood Blockouts
2. Posts 8 & 9:
   6"x8"x6'-6" [150x200x1980] Wood Posts with
   6"x8"x14" [150x200x360] Wood Blockouts
3. Post 10:
   6"x8"x6'-0" [150x200x1830] Wood Post with
   6"x8"x14" [150x200x360] Wood Blockout

THIS DRAWING REPLACES GR-3.6 DATED 8-22-03.

OHIO DEPARTMENT OF TRANSPORTATION
ROADWAY DESIGN ENGINEER
1-16-04
DATE

STDS. ENGR.
D. Focke

All metric dimensions (in brackets [ ]) are in millimeters unless otherwise noted.

ROADWAY ENGINEERING SERVICES

STANDARD ROADWAY CONSTRUCTION DRAWING

BRIDGE TERMINAL ASSEMBLY, TYPE TST

NUMBER GR-3.6

1 / 1