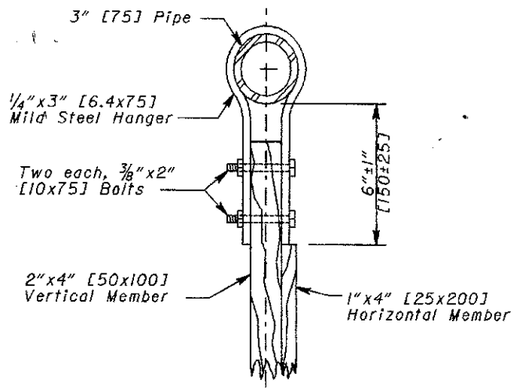

HANGER DETAIL

See CROSSING TYPE 4 Detail, Sheet 1 of 2.

NOTES

FENCE DETAILS: Details shown on this drawing apply to standard Type 47 Fence as detailed; however, the same designs may be used in the construction of all types of Fence if modified for differences in basic design, such as anchor assembly, height of fence, length of panel, or other variances that would affect the design.

CROSSINGS: Types 1, 2, or 3, shall be provided at earth side ditches and streams served by culverts smaller than 48" [1200] in rise. A Type 4 crossing shall be provided where fence crosses a paved channel that is over 18" [0.5 m] deep. (For Crossing Types, see Sheet 1 of 2.)

TYPE 2 CROSSING: This Type (Sheet 1 of 2) is shown crossing a live stream, but it may also be used for intermittent flow channels. For a live stream crossing, the barbed wire may be deleted or its spacing varied, when directed by the Engineer, to prevent or reduce the collection of debris.

ROCK CHANNEL PROTECTION: Rock shall consist of 18" [0.5 m] of Item 601 - Rock Channel Protection, Type B, with Filter, unless otherwise shown on the plans or determined by the Engineer. It shall be placed 6' [1.8 m] wide (2' [0.6 m] outside the fence and 4' [1.2 m] inside the fence), and shall be paid for as **Item 601 - Rock Channel Protection, Type ___ , w/Filter.**

CONCRETE ENCASEMENT: When no rock channel protection is required, the 2'-6" [760] depth of concrete encasement shall be measured from the bottom of the channel.

MAINTENANCE OPENING: Barbed wire and fence fabric in the opening shall be separate from the approach wire fabric, and shall be installed after the wire and fabric have been stretched and fastened on both approaches.

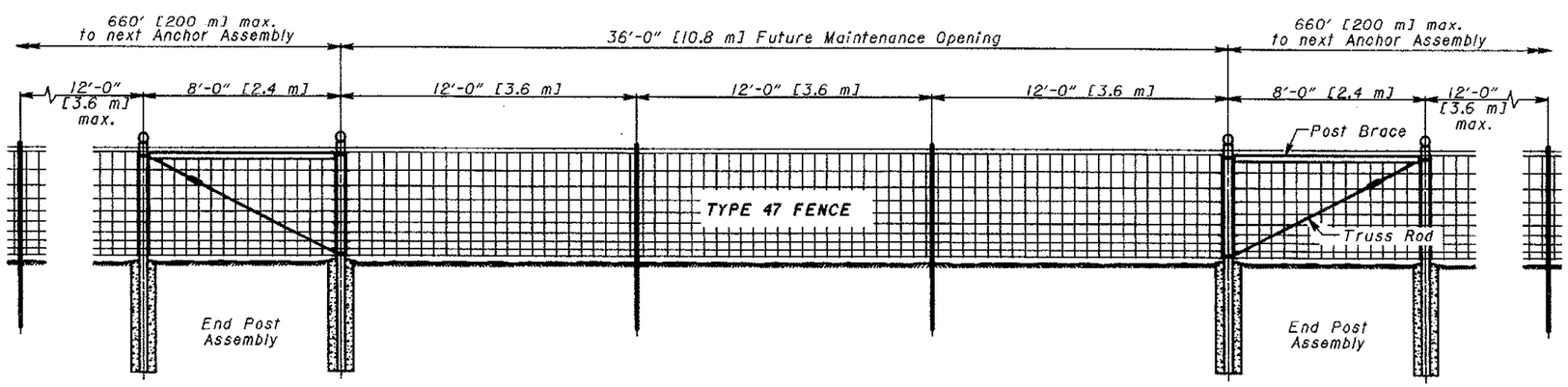

FUTURE MAINTENANCE OPENING

THIS DRAWING REPLACES F-3.4M DATED 4-8-97.

REVISIONS	
STDS. ENGR. M. Evans	DRAWN D. Focke
All metric dimensions (in brackets [ ]) are in millimeters unless otherwise noted.	
ROADWAY ENGINEERING SERVICES	
STANDARD ROADWAY CONSTRUCTION DRAWING	FENCE DETAILS
NUMBER F-3.4	2/2

OHIO DEPARTMENT OF TRANSPORTATION
ROADWAY DESIGN ENGINEER
DATE 7-28-00