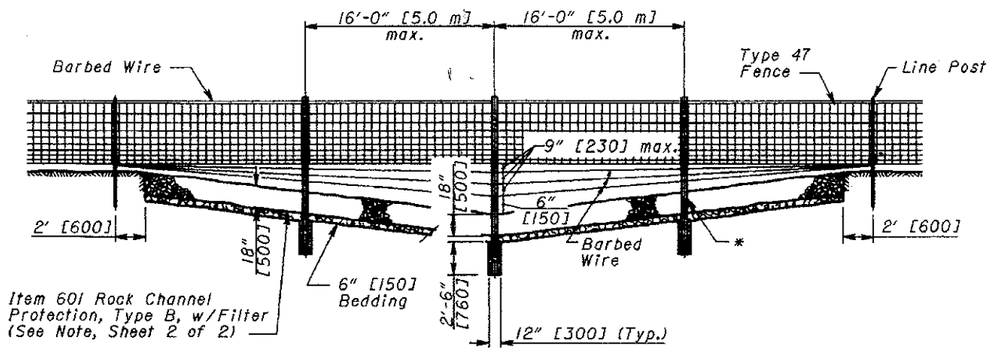

CROSSING TYPE 1

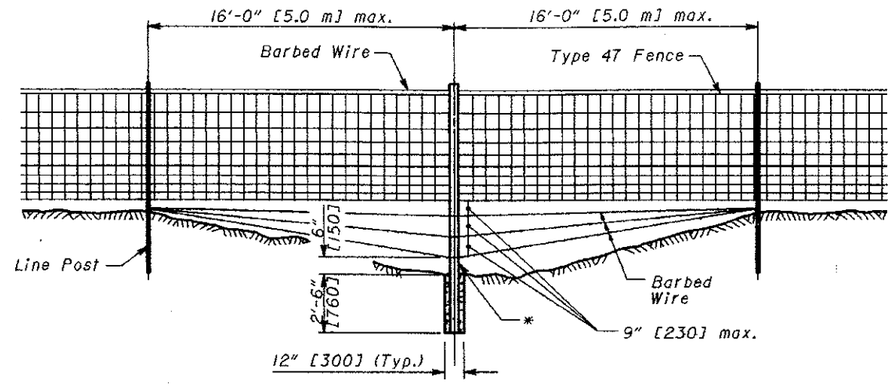

CROSSING TYPE 3

* Extra length Posts shall be 2½" [63] dia. Steel Pipe or 3"x3"x¼" [75x75x6.4] Angle, galvanized and set in Concrete.

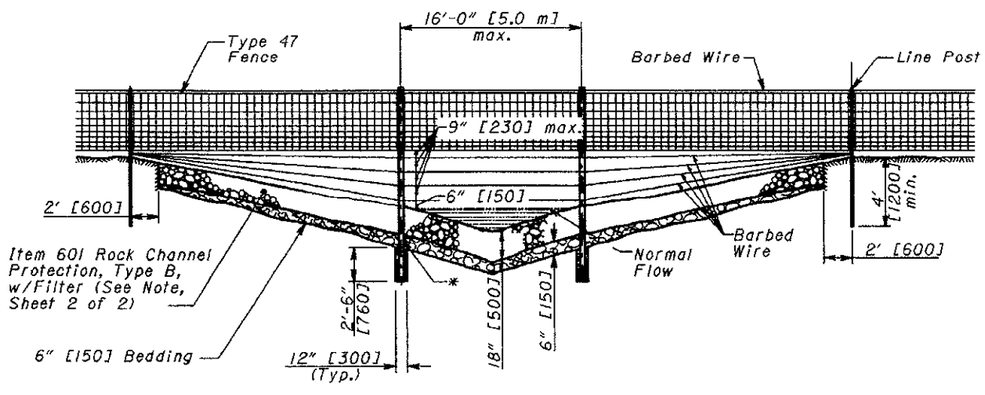

CROSSING TYPE 2

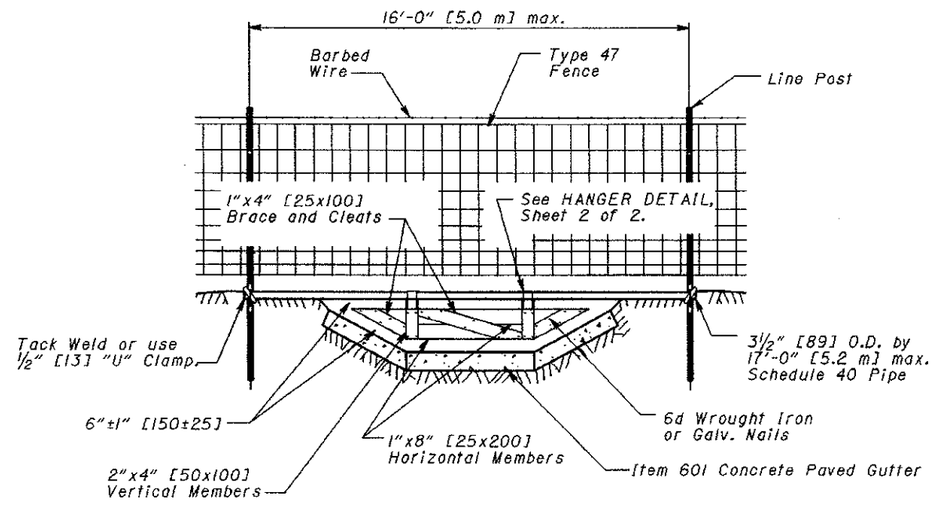

CROSSING TYPE 4

THIS DRAWING REPLACES F-3.4M DATED 4-8-97.

OHIO DEPARTMENT OF TRANSPORTATION	
ROADWAY DESIGN ENGINEER	7-28-00 DATE
REVISIONS	
STDS. ENGR. M. Evans	DRAWN D. Focke
All metric dimensions (in brackets [ ]) are in millimeters unless otherwise noted.	
ROADWAY ENGINEERING SERVICES	
STANDARD ROADWAY CONSTRUCTION DRAWING	
FENCE DETAILS	
NUMBER F-3.4	1/2