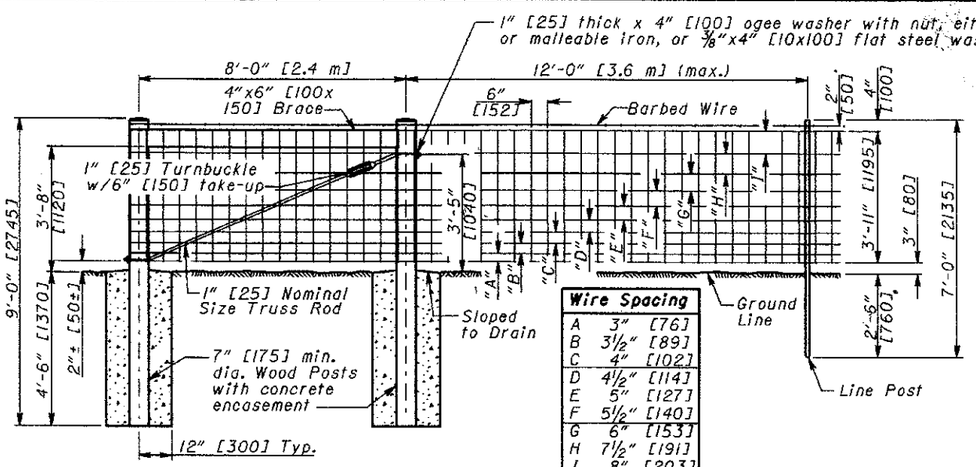

Wire Spacing		
A	3"	[76]
B	3½"	[89]
C	4"	[102]
D	4½"	[114]
E	5"	[127]
F	5½"	[140]
G	6"	[153]
H	7½"	[191]
I	8"	[203]

END OR CORNER POST ASSEMBLY

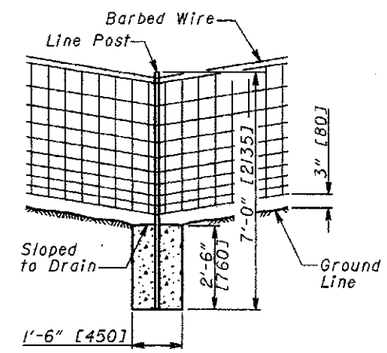

LINE POST IN A DIP SECTION

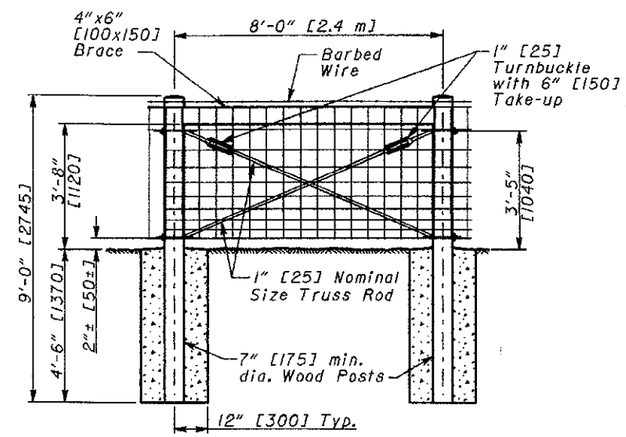

INTERMEDIATE ANCHOR POST ASSEMBLY

TYPE 47 FENCE

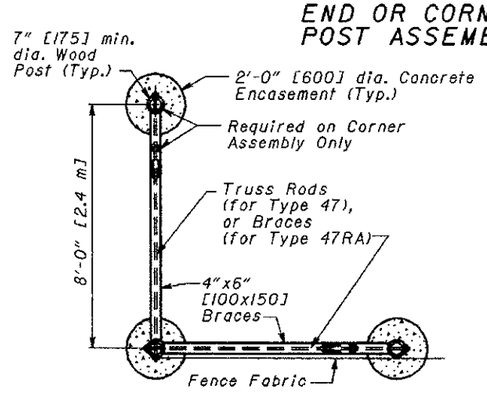

END OR CORNER POST ASSEMBLY PLAN VIEW

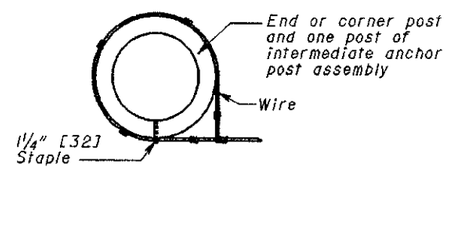

METHOD OF FASTENING FENCE

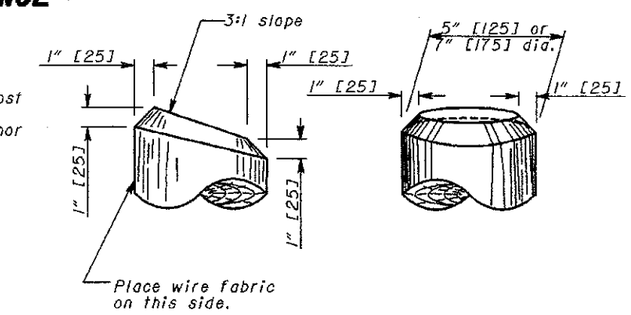

TOP OF POSTS

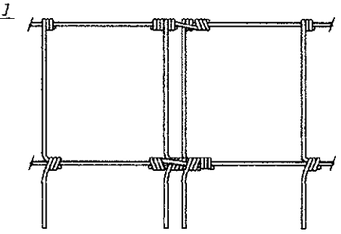

WIRE FENCE SPLICE

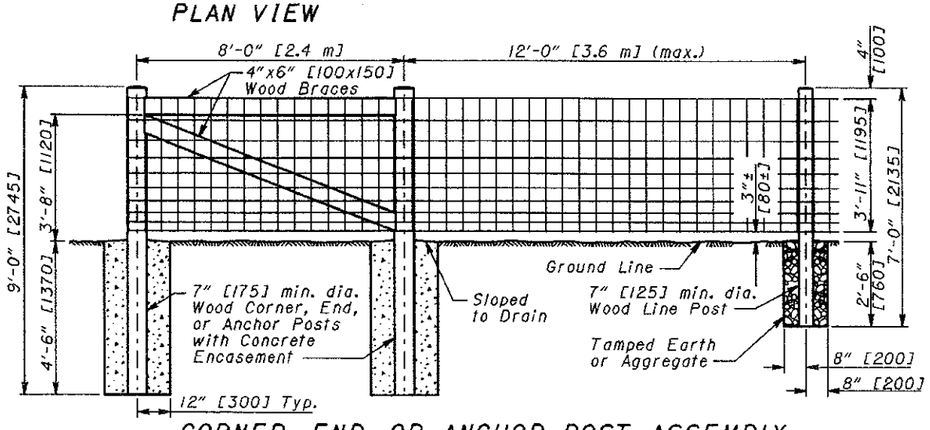

CORNER, END, OR ANCHOR POST ASSEMBLY

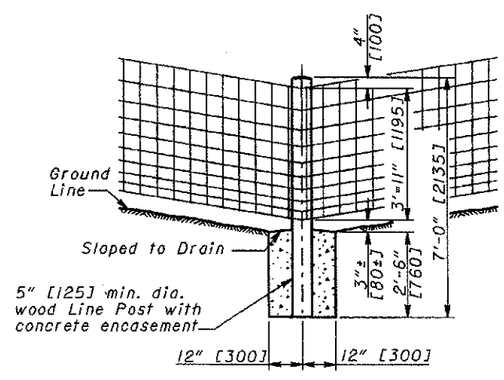

LINE POST IN A DIP SECTION

TYPE 47RA FENCE

NOTES

BRACES: Wood braces shall be set in notches in the posts and fastened with 16d nails.

POSTS: Concrete encasement and tamped earth or aggregate shall be omitted when wood posts are driven to grade, except for line posts in a dip section.
Posts set or driven to within 1" [25] of grade need not be trimmed.

FABRIC: Other methods for splicing wire fence may be used in lieu of the method shown, when approved by the Engineer.

TYPE 47RA FENCE: Type 47RA shall be used to fence rest areas. Where Types 47 and 47RA intersect at a corner, the corner assembly shall have all wood braces. Fence shall be paid for as **Item 607 - Fence, Type 47RA.**

THIS DRAWING REPLACES F-2.1M DATED 4-8-97.

DEPARTMENT OF TRANSPORTATION
ROADWAY DESIGN ENGINEER — DATE 7-28-00

REVISIONS

STDS. ENGR. M. Evans
DRAWN D. Focke

All metric dimensions (in brackets [ ]) are in millimeters unless otherwise noted.

ROADWAY ENGINEERING SERVICES

STANDARD ROADWAY CONSTRUCTION DRAWING

WOVEN WIRE FENCE

NUMBER F-2.1

1/1