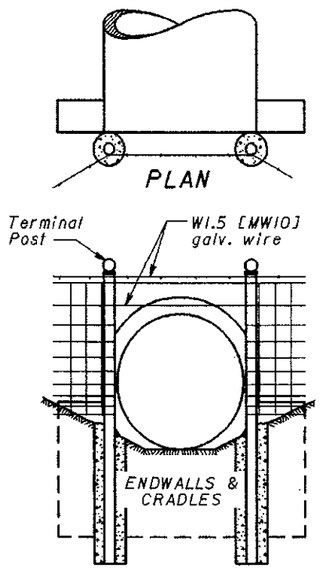

48", 54" & 60" [1200, 1350, and 1500] diameters

TYPE A

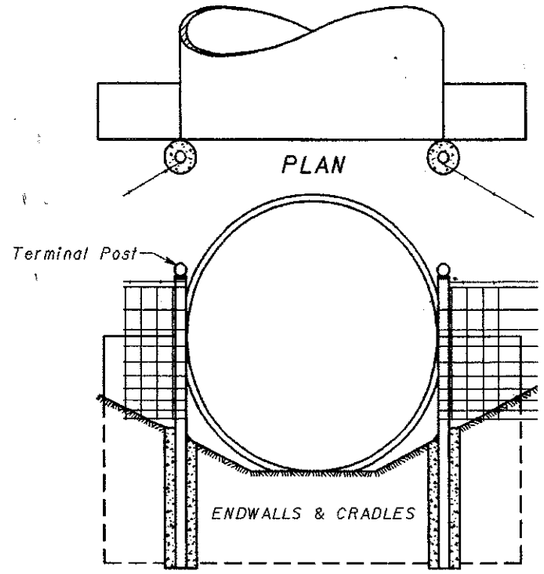

66" [1650] diameter and larger

TYPE B

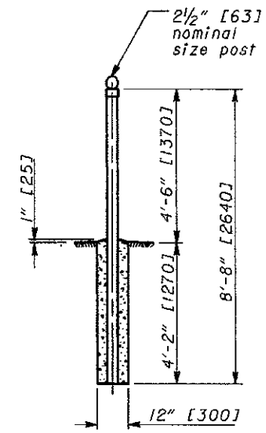

TERMINAL POST

NOTES

FENCE TYPE: Fence terminals shown on this drawing apply to Type 47 fence as detailed, however, the same designs may be used in the construction of all types of fence if modified for differences in basic design such as anchor assembly, height of fence, length of panel, or any other variance that would affect the terminal design.

Cost of furnishing and installing connecting rods, eyebolts and anchors for wall connections shall be included in the unit price bid per meter of fence.

ANCHORS: Self-drilling anchors shall conform to CMS 712.01. Threaded steel inserts may be cast-in-place when the structure is constructed, instead of using self-drilling anchors.

EYEBOLT: The steel shall be in accordance with ASTM A 489, except that the bend test is waived. The eyebolt shall be galvanized in accordance with ASTM A 153.

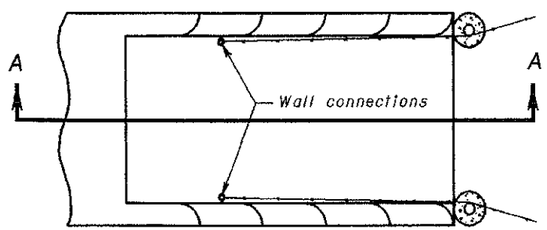

PLAN

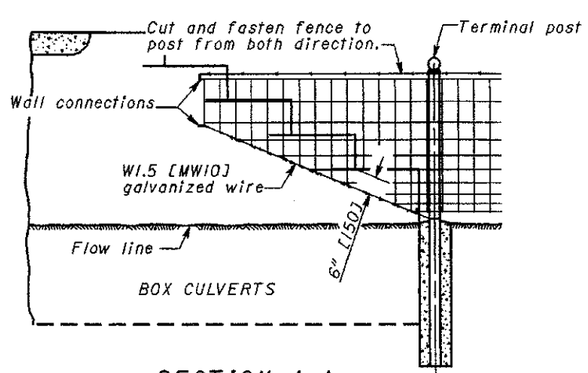

SECTION A-A

TYPE C

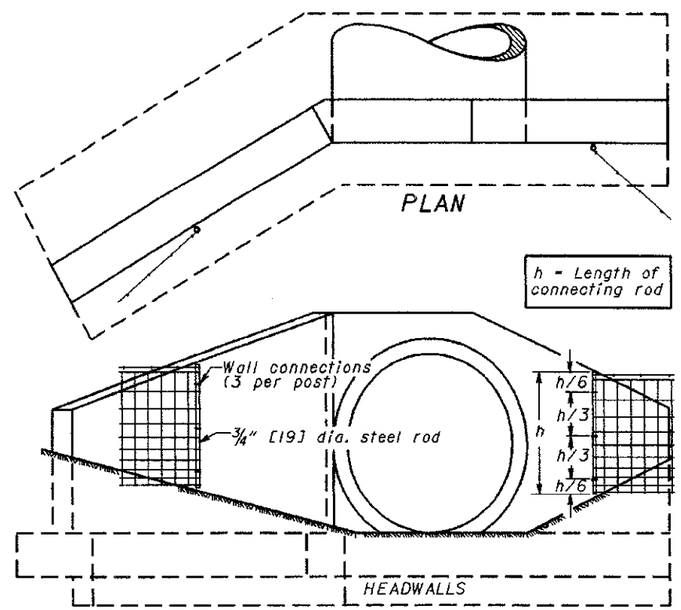

ELEVATION

TYPE D

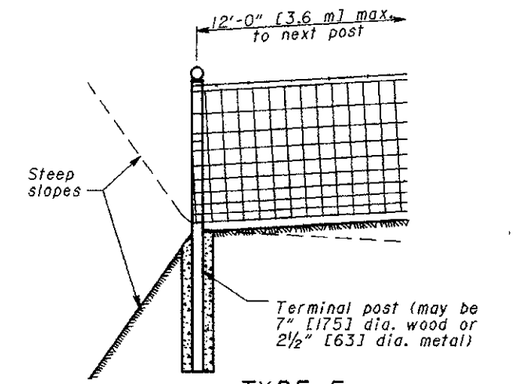

TYPE E

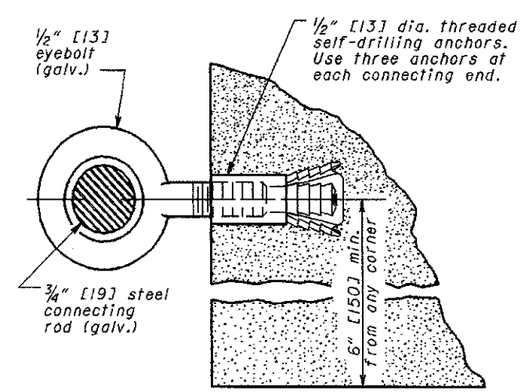

WALL CONNECTION

THIS DRAWING REPLACES F-3.3M DATED 4-21-95.

ONTARIO DEPARTMENT OF TRANSPORTATION	7/28-00
ROADWAY DESIGN ENGINEER	DATE
REVISIONS	
STDS. ENGR. M. Evans	DRAWN D. Focke
All metric dimensions [in brackets] are in millimeters unless otherwise noted.	
ROADWAY ENGINEERING SERVICES	
STANDARD ROADWAY CONSTRUCTION DRAWING	
FENCE TERMINALS	
NUMBER F-3.3	1/1