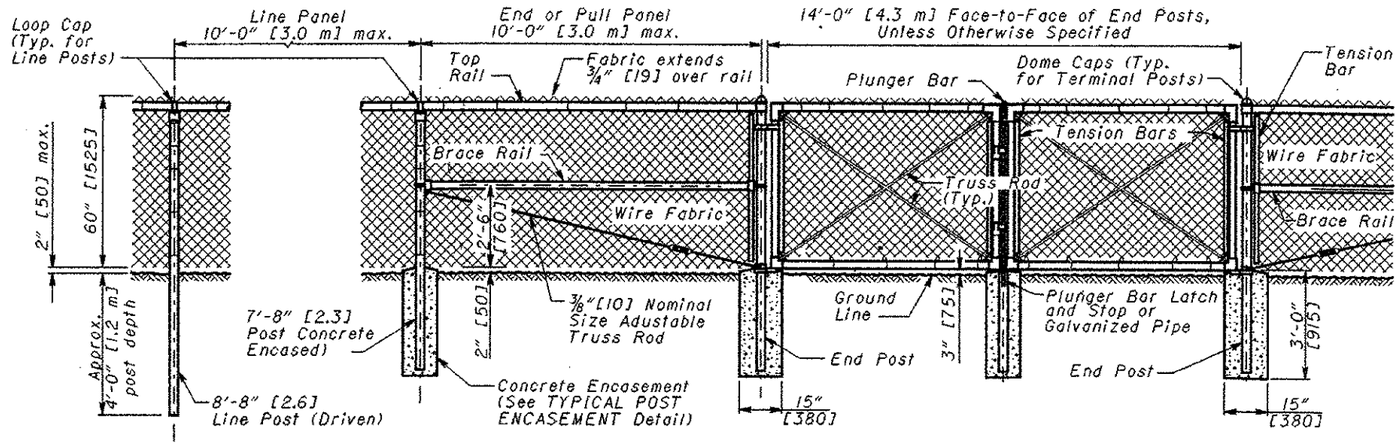

TYPE CL FENCE

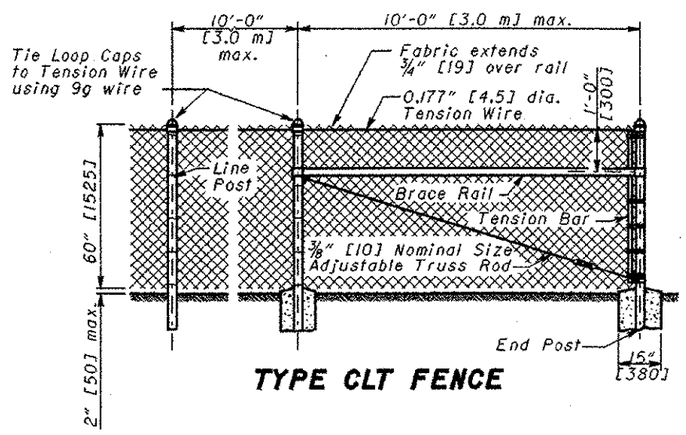

TYPE CLT FENCE

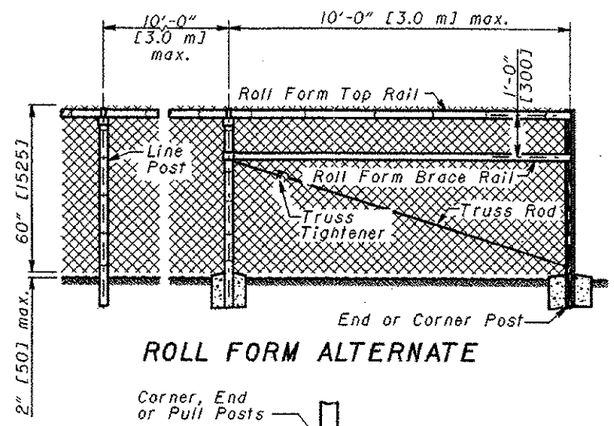

ROLL FORM ALTERNATE

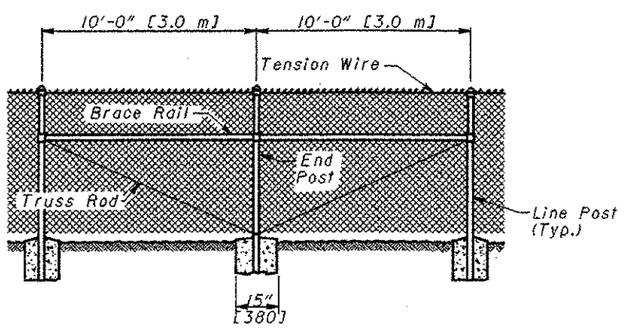

INTERMEDIATE ANCHOR POST ASSEMBLY

For Type CLT Fence

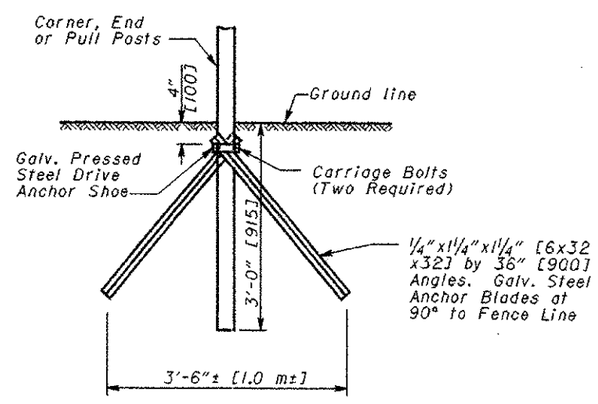

DRIVE ANCHOR DETAIL

For Terminal Posts

NOTES

FENCING: For information not covered in this drawing, see CMS 607.

POST ENCASEMENT: Line posts shall normally be driven to an embedment depth of 48" [1.2 m]. Where soil or other conditions do not permit driving to this depth, post holes shall be dug or bored and the posts encased in concrete (see detail). Posts located in unconsolidated fills or other loose soils, in dips or other depressions in the ground surface, or installed with fabric exceeding 60" [1525] in height shall also be encased in concrete.

All Terminal Posts (end, corner and pull panel posts) shall be encased in concrete. If these posts cannot by encased, steel drive anchors may be used as shown in the DRIVE ANCHOR DETAIL.

FRAMEWORK AND FABRIC: Materials may be any type permitted by CMS 710.03.

TENSION WIRE: Wire shall be used instead of the top rail when specified on the plans as Item 607 - Fence, Type CLT. The wire shall be stretched taut and fastened to or passed through the top fitting. The fence shall be fastened to the tension wire with fabric ties consisting of hog rings every 24" [600] or less.

GATES: Each gate shall be equipped with an approved padlock with a double locking bolt, a five-pin tumbler, a laminated steel case, and a brass cylinder, and shall be rust-proof. Where companion gates are installed on opposite sides of the highway, tumblers shall be identically set in each lock so that the same key will open each lock. Two keys shall be furnished with each padlock. The cost of the padlock and keys shall be included in the cost of the gate.

STREAM CROSSINGS: Where chain link fence is to be constructed continuously across streams, and stream crossing closures are required by the plans, the closure shall be constructed in accordance with the details shown on **SCD F-3.4**, modified as necessary to conform to chain link fence dimensions and details.

FENCE GROUNDING: When needed for overhead electrical lines, grounding is to be in accordance with the **Office of Traffic Engineering's SCD HL-50.11.**

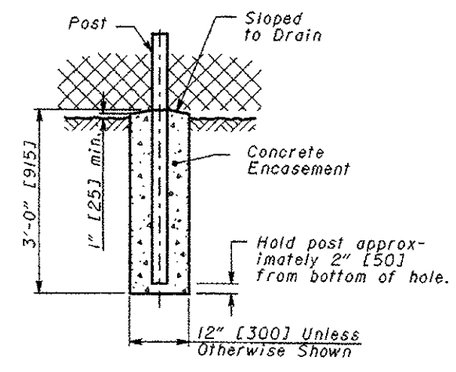

TYPICAL POST ENCASEMENT

THIS DRAWING REPLACES F-1.1 DATED 7-28-00.

OHIO DEPARTMENT OF TRANSPORTATION
7-16-04
DATE
ROADWAY DESIGN ENGINEER

STDS. ENGR. D. Focke

All metric dimensions in meters [1] are in millimeters [1] unless otherwise noted.

ROADWAY ENGINEERING SERVICES

STANDARD ROADWAY CONSTRUCTION DRAWING

CHAIN LINK FENCE

NUMBER F-1.1

1/1