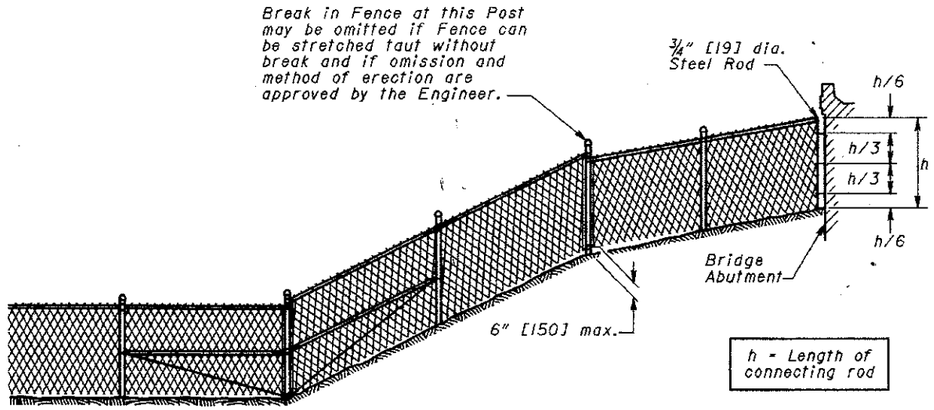

CHAIN LINK FENCE

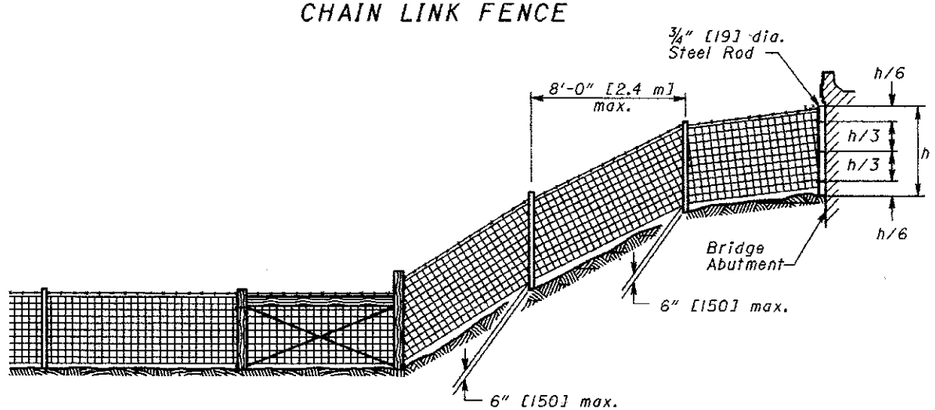

WOVEN WIRE FENCE

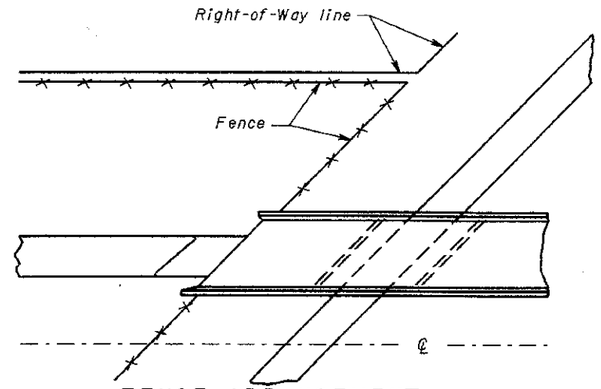

FENCE ARRANGEMENT
AT FREEWAY OVERPASS

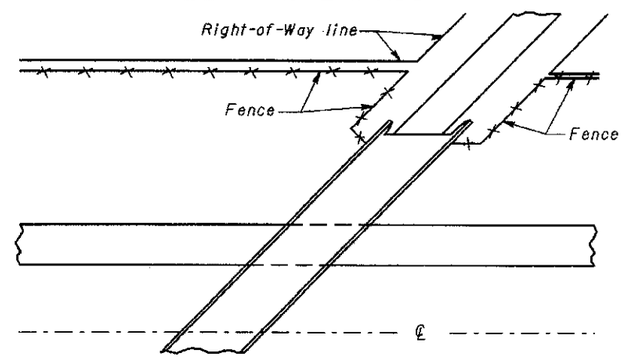

FENCE ARRANGEMENT
CROSS ROAD ON ORIGINAL PROFILE

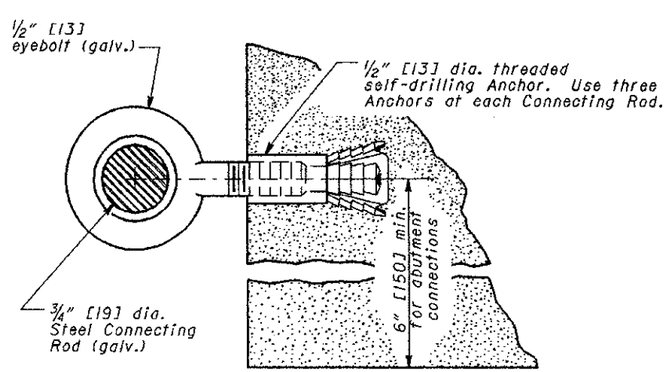

ABUTMENT CONNECTION

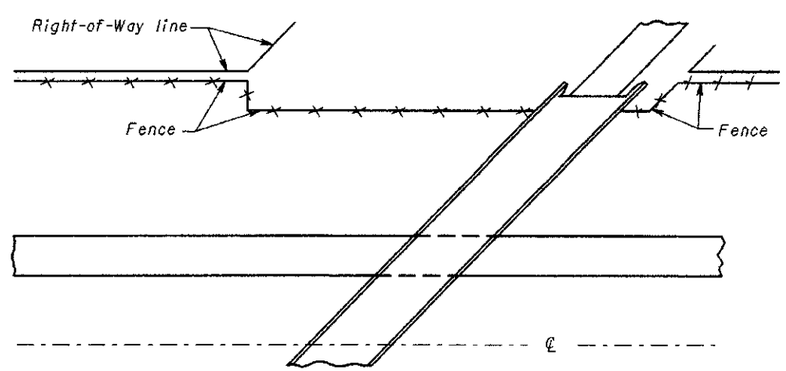

FENCE ARRANGEMENT
CROSS ROAD ON HIGH FILL

NOTES

GENERAL: Details shown hereon shall be used with **SCD F-1.1** and **SCD F-2.1.**

ABUTMENT CONNECTION: The cost of furnishing and installing connecting rods, eyebolts, and anchors shall be included in the unit price bid per Linear Foot [Meter] of fence. Where needed to clear deck projections or other irregularities, the shaft length of the eyebolt may vary.

ANCHORS: Self-drilling anchors shall conform to CMS 712.01. Threaded steel inserts may be cast-in-place when the structure is constructed instead of using using self-drilling anchors.

EYEBOLTS: The steel shall be in accordance with ASTM A 489, except that the bend test is waived. The eyebolt shall be galvanized in accordance with ASTM A 153.

CLEARANCE: On embankments approaching bridges, the clearance of the lower fence wires may vary from 0 to 6" [150].

THIS DRAWING REPLACES F-3.1M DATED 4-21-95.

OHIO DEPARTMENT OF TRANSPORTATION
ROADWAY DESIGN ENGINEER
7-28-00
DATE

REVISIONS

STDS. ENGR. M. Evans
DRAWN D. Focke

All metric dimensions in brackets [ ] are in millimeter units otherwise noted.

ROADWAY ENGINEERING SERVICES

STANDARD ROADWAY CONSTRUCTION DRAWING
FENCE DETAILS AT BRIDGES

NUMBER F-3.1

1/1