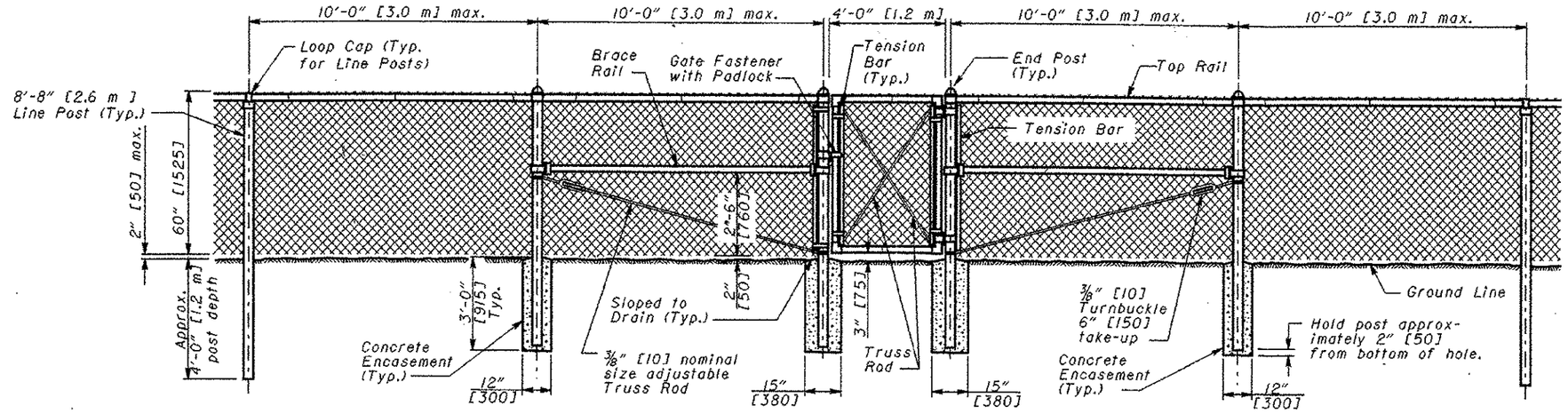

CHAIN LINK WALK GATE

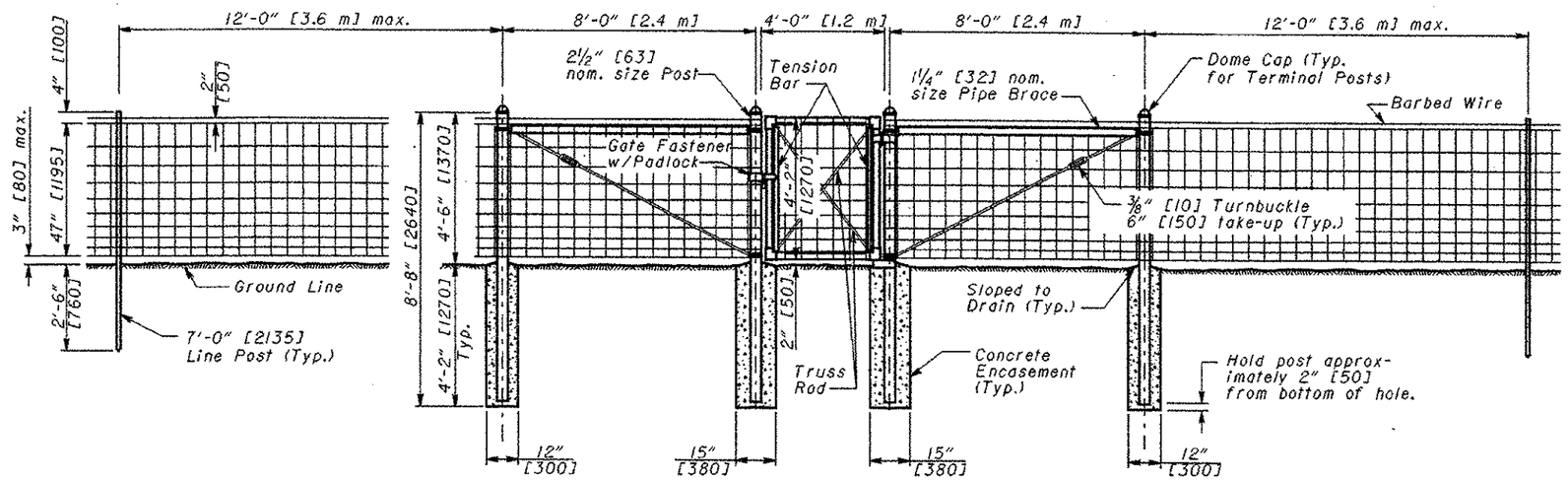

TYPE 47 WALK GATE

NOTES

GATES: Each gate shall be equipped with an approved padlock with a double locking bolt, a five-pin tumbler, a laminated steel case, and a brass cylinder, and shall be rust-proof. Where companion gates are installed on opposite sides of the highway, tumblers shall be identically set in each lock so that the same key will open each padlock. The cost of the padlock and keys shall be included in the cost of the gate.

TRUSS RODS: Rods may be omitted from gate frames if welded joints are furnished.

TYPE 47 WALK GATE: Walk gate and end post assemblies at gate openings shall conform to CMS 607, except as shown otherwise on this drawing.

THIS DRAWING REPLACES F-3.2 DATED 7-28-00.

OHIO DEPARTMENT OF TRANSPORTATION
ROADWAY DESIGN ENGINEER — DATE 7-16-04

STDS. ENGR. D. Focke

All metric dimensions in brackets [ ] are in millimeters unless otherwise noted.

ROADWAY ENGINEERING SERVICES

STANDARD ROADWAY CONSTRUCTION DRAWING

WALK GATES

NUMBER F-3.2

1/1