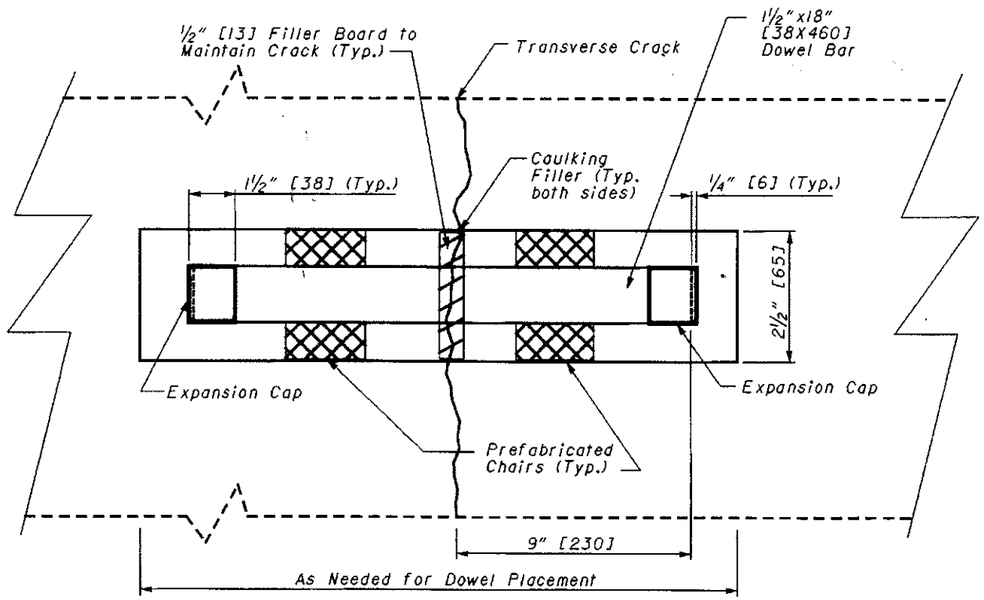

PLAN

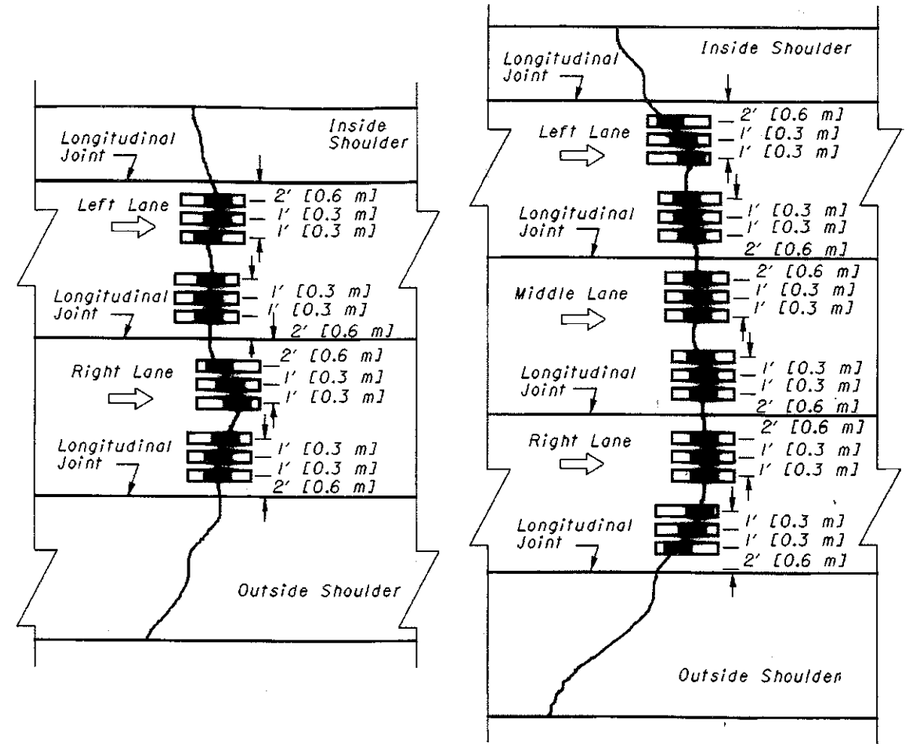

RETROFIT DOWEL BAR SPACING

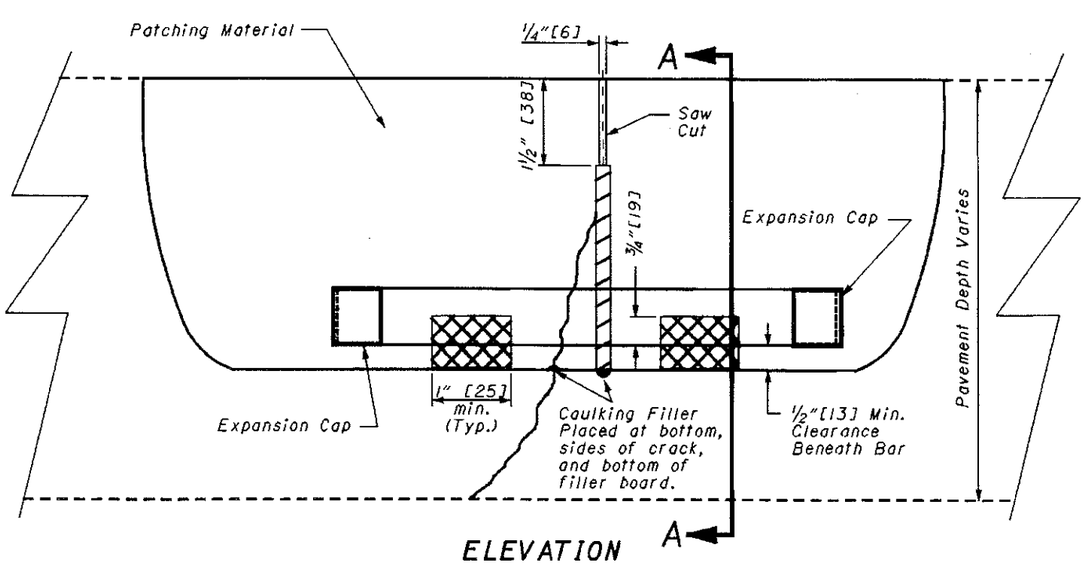

ELEVATION

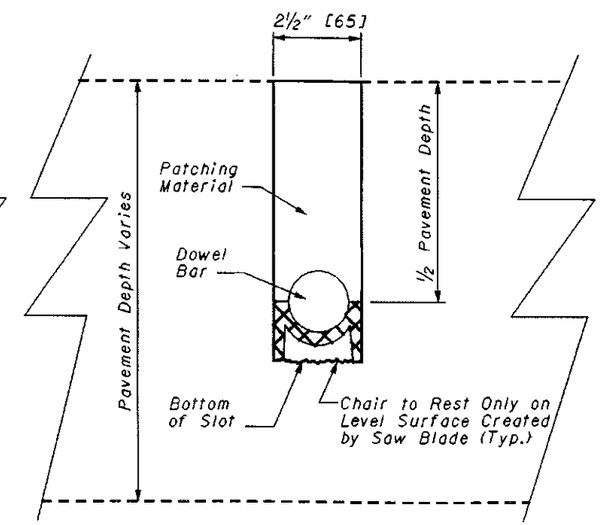

SECTION A-A

NOTES

Cracks to be retrofitted will be marked on the pavement by the Engineer.

Prefabricated chair as approved by the Engineer.

1 1/2"x18" [38x460] RETROFIT DOWEL BAR

NEW DRAWING

OHIO DEPARTMENT OF TRANSPORTATION
PAVEMENT ENGINEERING ADMINISTRATOR
7-15-05
DATE

PAVEMENT DESIGN ENGR. D. Miller

All metric dimensions in brackets [] are in millimeters unless otherwise noted.

ROADWAY ENGINEERING SERVICES

STANDARD ROADWAY CONSTRUCTION DRAWING
RETROFIT DOWEL BAR

NUMBER BP-2.6

1 / 1