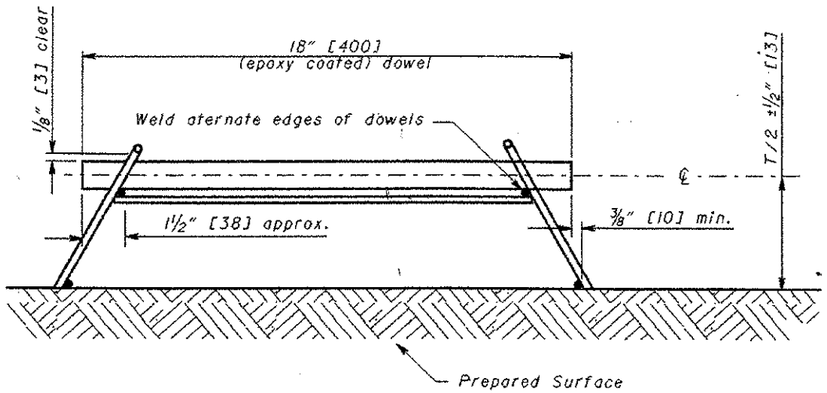

SECTION A-A

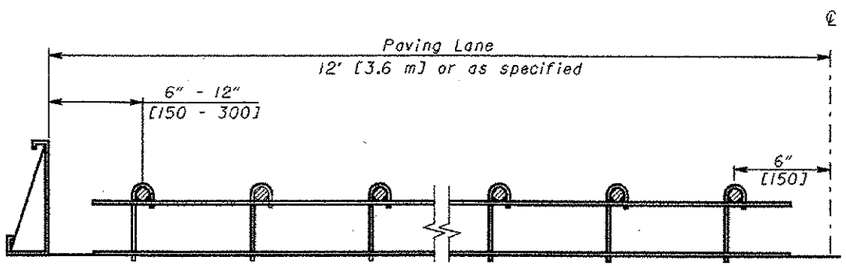

SECTION B-B

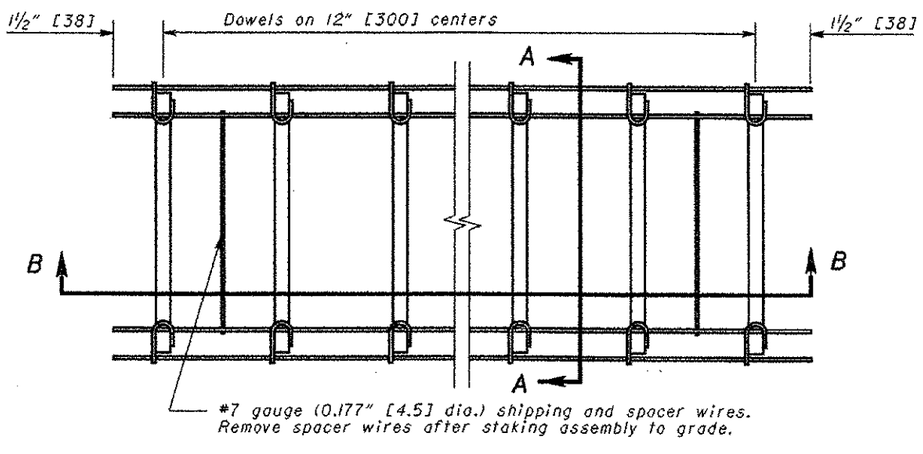

PLAN VIEW

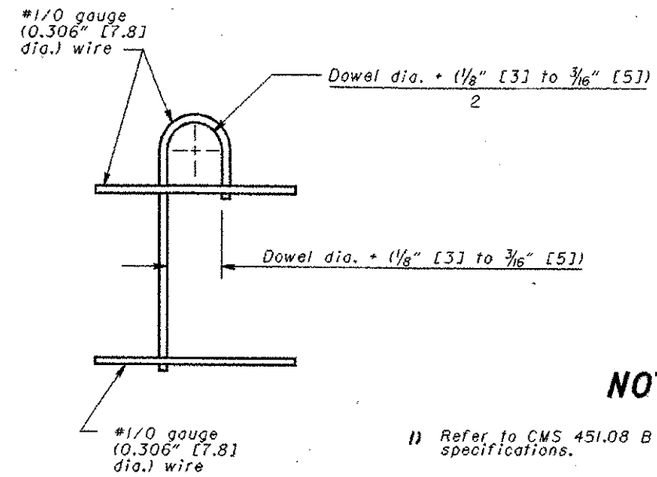

J-LEG DETAIL
(ALTERNATE)

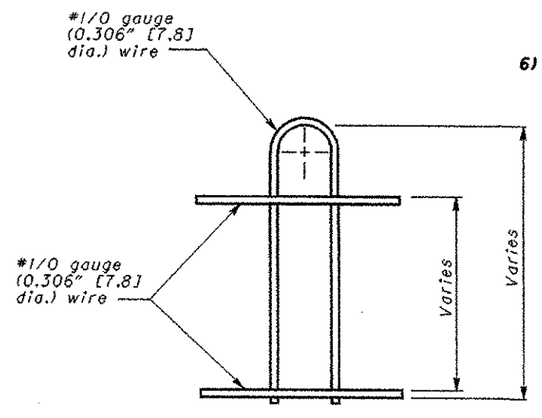

U-LEG DETAIL

NOTES

1) Refer to CMS 451.08 B and 709.13 for dowel specifications.
2) Wire sizes shown are minimum required.
3) All wire intersections are to be welded.
4) Stakes typically applied at working ends of dowel.
5) TOLERANCES:
   A) ±1/4" per foot [±20 mm per meter] unless otherwise specified.
   B) Centerline of individual dowels shall be parallel to each other, the surface and the centerline of the slab.
   C) On centers should be ±1/2" [±13].
   D) Dowels should be placed at mid-depth of slab.
6) J-Leg or U-Leg to be installed on inside or outside of subframe.

NEW SHEET.

OHIO DEPARTMENT OF TRANSPORTATION
ROADWAY DESIGN ENGINEER
7-16-04
DATE

STDS. ENGR.
D. Focke

All metric dimensions (in brackets [ ]) are in millimeters unless otherwise noted.

ROADWAY ENGINEERING SERVICES

STANDARD ROADWAY CONSTRUCTION DRAWING
TRANSVERSE PAVEMENT JOINTS
(Universal Welded Dowel Basket Assembly)

NUMBER
BP-2.2

2/2