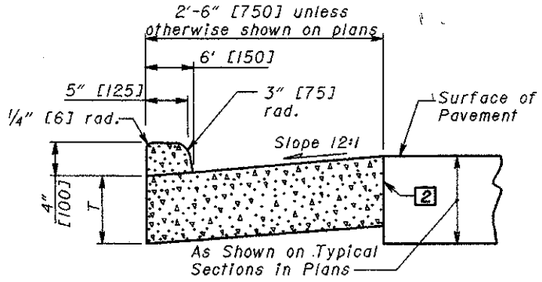

TYPE 4

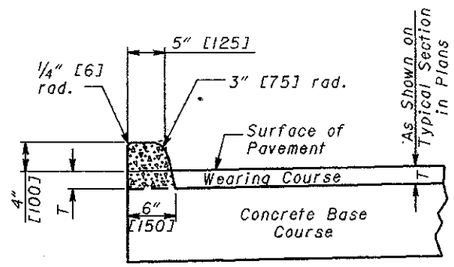

TYPE 4-B

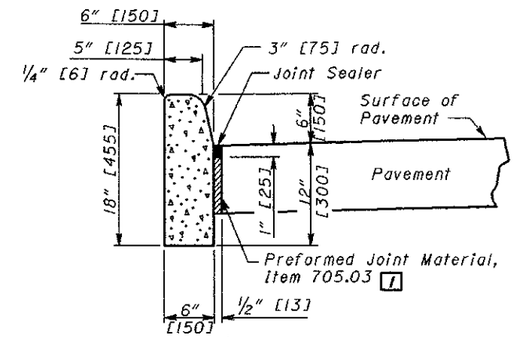

TYPE 6

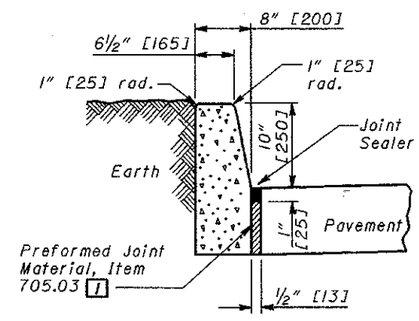

TYPE 7

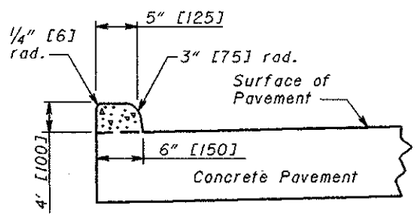

TYPE 4-A

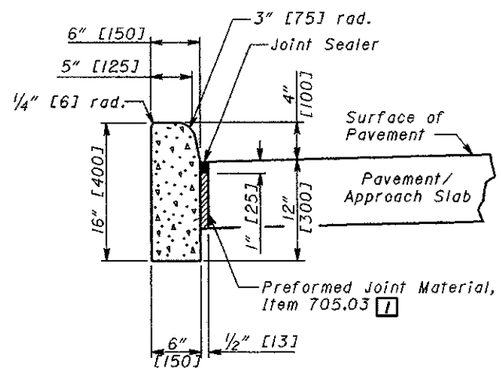

TYPE 4-C

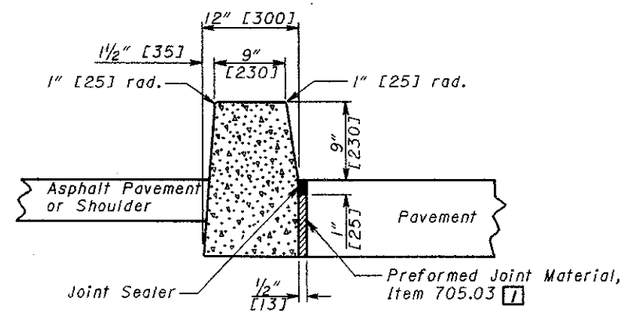

TYPE 8

See Sheet 1 of 2 for Notes and Legend.

THIS DRAWING REPLACES BP-5.1M DATED 10-28-94.

OHIO DEPARTMENT OF TRANSPORTATION
ROADWAY DESIGN ENGINEER
DATE 7-28-00

REVISIONS

STDS. ENGR. M. Evans
DRAWN D. Focke

All metric dimensions (in brackets [ ]) are in millimeters unless otherwise noted.

ROADWAY ENGINEERING SERVICES

STANDARD ROADWAY CONSTRUCTION DRAWING
CONCRETE CURBS AND COMBINED CURB AND GUTTERS

NUMBER BP-5.1

2/2