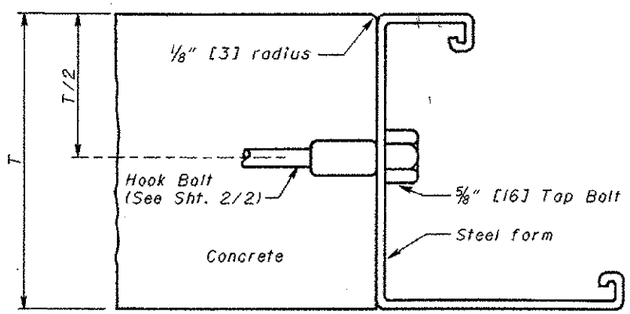

ACCEPTABLE METHOD OF FORMING JOINT

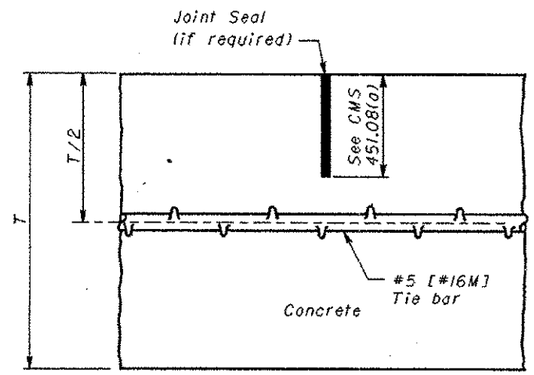

SAWED JOINT

NOTES

GENERAL: Longitudinal joints shall be used when specified on the typical section and shall be constructed as shown on this drawing in Items 451 and 452 Pavement and Item 305 Base.

The joint shall be on the centerline of the pavement unless otherwise shown on the plans. Where the pavement width exceeds 16' [5.0 m], an additional longitudinal joint shall be introduced into the jointing details as directed by the Engineer.

Tie bars shall be #5 [#16M] deformed bars. A satisfactory device shall be used to hold the tie bars in proper position or they may be installed by a mechanical installing device. Tie bars shall be centered on the longitudinal joint as nearly as practical.

BUTT JOINT: The longitudinal joint between adjoining slabs poured in separate operations shall be a butt joint with hook bolts or tie bars, unless otherwise shown on the plans. Bent tie bars shall not be permitted.

TYPE D (DRILLED TIED LONGITUDINAL) JOINT: Type D joints shall be constructed in accordance with CMS 255.05. The nylon or plastic retention disc shall be clear or opaque white in color. Grout shall meet the requirements of CMS 255.02. 5/8" [16] expansion anchors, FF-S-325, Group VIII, Type I or Group II Type 4, Class I may be used lieu of the #5x24" [#16Mx600] deformed bar and shall be installed according to the manufacturer's recommendations.

The use of self drilling expansion shield anchors, FF-S-325, Group III, Type I (a) and (c) shall not be permitted.

See Sheet 2/2 for additional details.

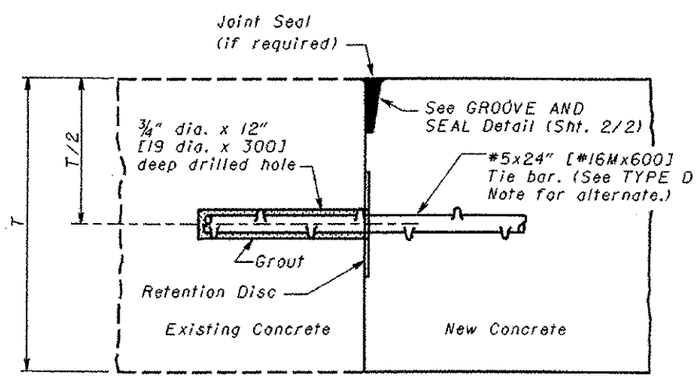

TYPE D (DRILLED TIED LONGITUDINAL) JOINT

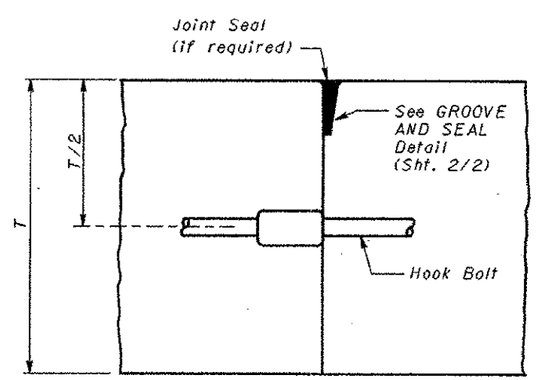

BUTT JOINT
w/ HOOK BOLT

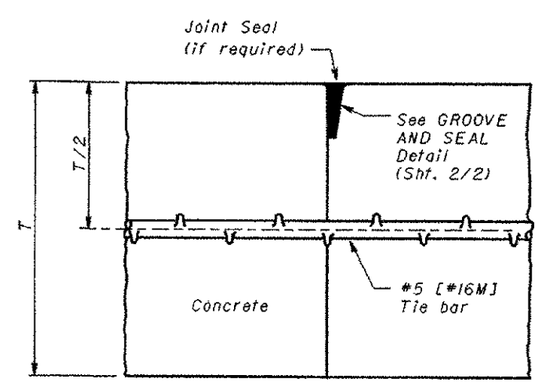

BUTT JOINT
W/ TIE BAR

THIS DRAWING REPLACES BP-2.1 DATED 7-28-00.

OHIO DEPARTMENT OF TRANSPORTATION
ROADWAY DESIGN ENGINEER
7-16-04
DATE

STDS. ENGR.
D. Focke

All metric dimensions (in brackets [ ]) are in millimeters unless otherwise noted.

ROADWAY ENGINEERING SERVICES

STANDARD ROADWAY CONSTRUCTION DRAWING
LONGITUDINAL PAVEMENT JOINTS

NUMBER
BP-2.1

1/2