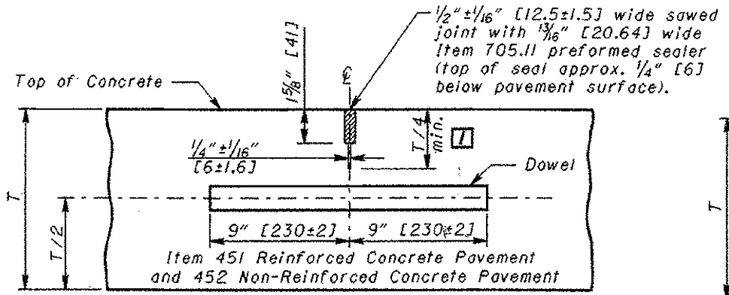

ITEM 451 & 452 w/sealed joints

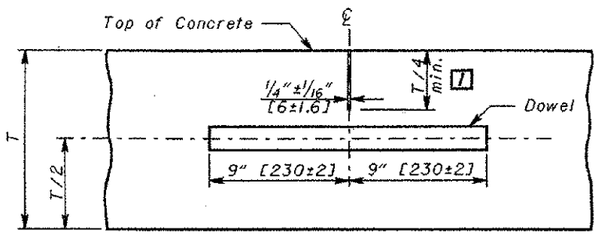

ITEM 451 & 452 w/unsealed joints
(Dowel Bar omitted for shoulders, alleys, driveways, etc.)

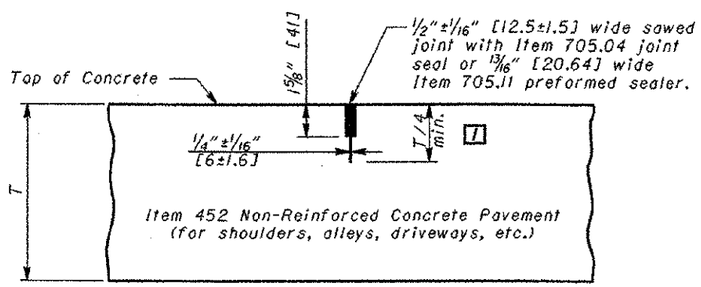

ITEM 452 w/sealed joints

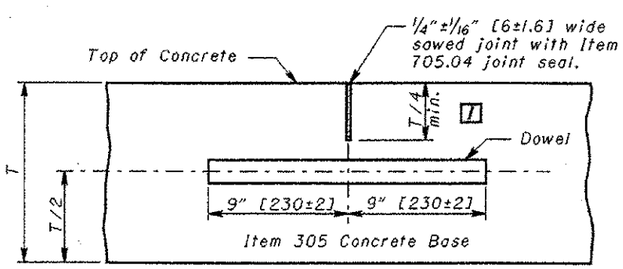

ITEM 305
(Dowel Bar omitted for shoulders, alleys, driveways, etc.)

CONTRACTION JOINTS SECTIONS

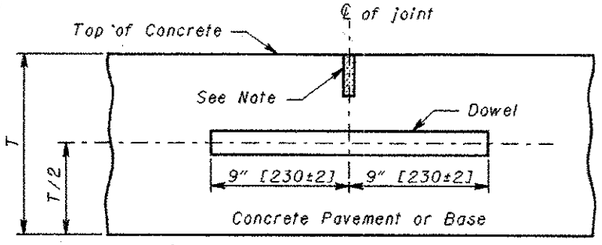

SECTION THROUGH CONSTRUCTION JOINT

CONSTRUCTION JOINT

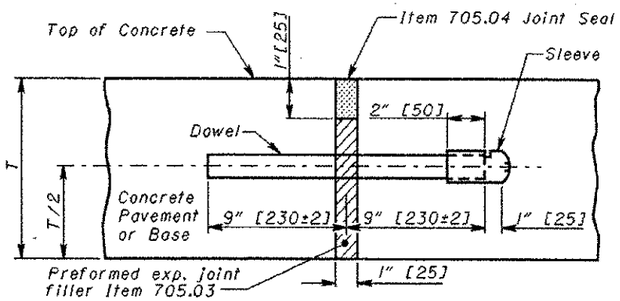

SECTION THROUGH EXP. JOINT

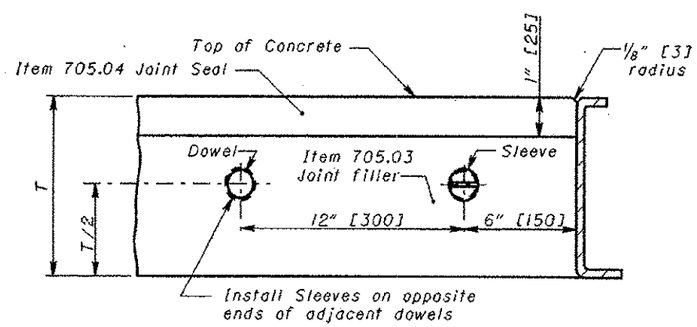

SIDE ELEVATION OF EXP. JOINT
(through Concrete Pavement or Base)

EXPANSION JOINTS

NOTES

GENERAL: Notes and details shown on this drawing shall be considered in conjunction with and supplemental to the pertinent specifications for portland cement concrete pavement and bases, and related incidentals.

JOINT COMPONENTS: This drawing is intended for use with a uniform depth pavement. When the project involves the placing of variable depth pavement, the joint components shall be held in place in accordance with the method shown in the plans or as approved by the Engineer.

CONTRACTION JOINTS: Contraction joints in Item 305 Concrete Base shall be dowelled where they are located in mainline pavement, ramps, acceleration/deceleration lanes, or collector/distributor lanes, or in shoulders within 500' [150 m] of a pressure relief joint.

Contraction joints in Item 305 Concrete Base shall not be dowelled in alleys, private drives, or commercial drives.

Contraction joints of the type specified shall be spaced in accordance with the CONTRACTION JOINT SPACING Table.

CONTRACTION JOINT SPACING

Types of Pavement or Base	Maximum Spacing Between Joints
Item 451 Reinforced Concrete Pavement	21' [6.5 m]
Item 452 Non-Reinforced Concrete Pavement	15' [4.6 m]
Item 305 Concrete Base	15' [4.6 m]

CONSTRUCTION JOINTS: In Item 305 Concrete Base, a construction joint shall not be located closer than than 6' [1.8 m] to another parallel joint.

Kerf and seal conforming in all respects to details shown for contraction joints shall be provided at each construction joint in concrete pavement and base.

SEALING BASE CONTRACTION JOINTS: All contraction joints for concrete base shall be sealed as detailed on this drawing and the cost included in the unit price bid for Item 305.

LEGEND

1 Where T > 10" [255], the sawcut depth shall be T/3.

THIS SHEET REPLACES BP-2.2 DATED 7-28-00.

OHIO DEPARTMENT OF TRANSPORTATION
ROADWAY DESIGN ENGINEER
7-16-04
DATE

STDS. ENGR. D. Focke

All metric dimensions (in brackets [ ]) are in millimeters unless otherwise noted.

ROADWAY ENGINEERING SERVICES

STANDARD ROADWAY CONSTRUCTION DRAWING
TRANSVERSE PAVEMENT JOINTS

NUMBER BP-2.2