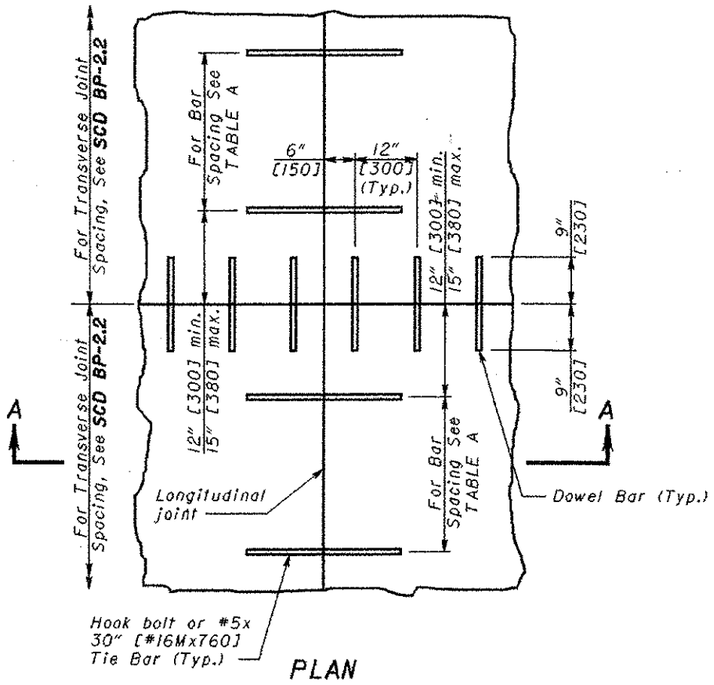

PLAN

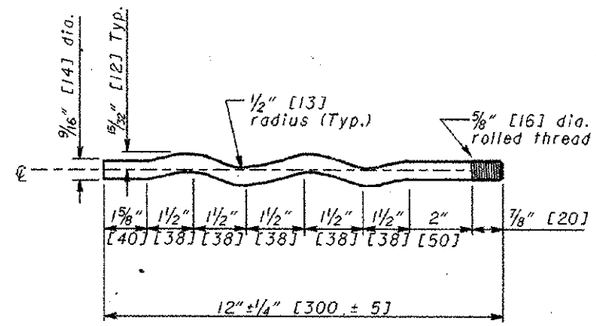

HOOK BOLT ALTERNATE

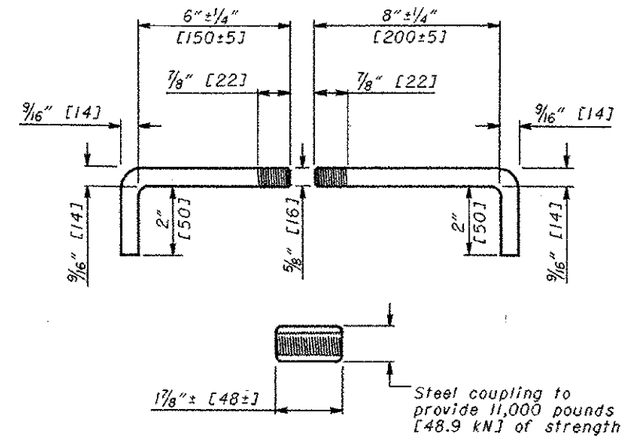

HOOK BOLT

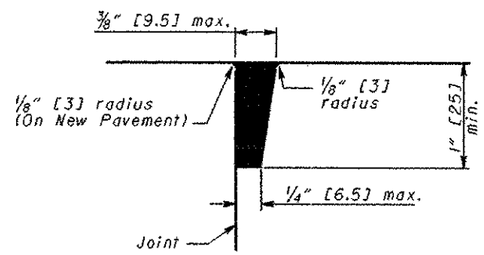

GROOVE AND SEAL DETAIL

TABLE A			
Thickness of Pavement	**Transverse Joint Spacing**	**Number of Tie Bars per Slab**	**Max. spacing between Tie Bars**
10" [250] or less	15' [4.6 m]	7	26" [660]
	21' [6.5 m]	10	26" [660]
Greater than 10" [250]	15' [4.6 m]	9	20" [508]
	21' [6.5 m]	13	20" [508]

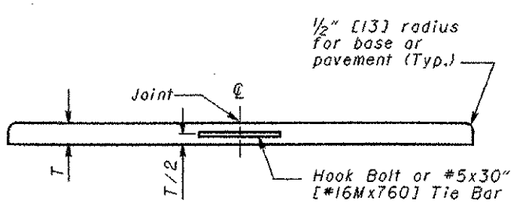

SECTION A-A

TIE BAR OR HOOK BOLT SPACING

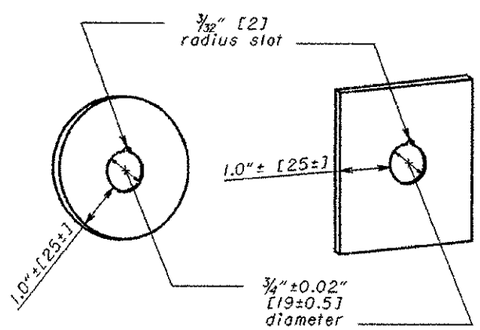

NYLON OR PLASTIC GROUT RETENTION DISCS FOR DOWEL/TIE BARS

(1/16" [1.6] min. thick)

NOTES

GROOVES: Grooves for sealing expansion bolt or butt joints in Item 451 or 452 pavements shall be formed by depressing a device or bar into the newly deposited concrete adjacent to the existing or previously poured lane. The device or bar shall be removed as soon as the concrete is in such condition as to preclude distortion of the concrete.

Adjoining slabs adjacent to grooved joints shall be edged with a thin metal edger having a radius of 1/8" [3]. Any impression left in the surface of the pavement by the flat part of the edging tool shall be eliminated.

In lieu of the above method the longitudinal joint may be constructed in accordance with CMS 451.08(a).

After the joint is formed it shall be protected from dirt and foreign matter until the joint seal is placed.

SEALING JOINTS: Sawed or hand-formed joints may be sealed with CMS 705.04 or 705.11 joint sealer.

HOOK BOLTS: Threaded hook bolts and alternates shall be turned to a tight fit when installed in couplings.

METAL STRENGTH: Tie bars, hook bolt assemblies and the hook bolt alternate shall have a minimum strength of 11,000 pounds [48.9 kN].

SPACING: Tie bars shall not be located within 12" [300] of any transverse joint.

THIS DRAWING REPLACES BP-2.1 DATED 7-28-00.

OHIO DEPARTMENT OF TRANSPORTATION
ROADWAY DESIGN ENGINEER
7-16-04
DATE

STDS. ENGR.
D. Focke

All metric dimensions (in brackets [ ]) are in millimeters unless otherwise noted.

ROADWAY ENGINEERING SERVICES

STANDARD ROADWAY CONSTRUCTION DRAWING
LONGITUDINAL PAVEMENT JOINTS

NUMBER
BP-2.1

2/2