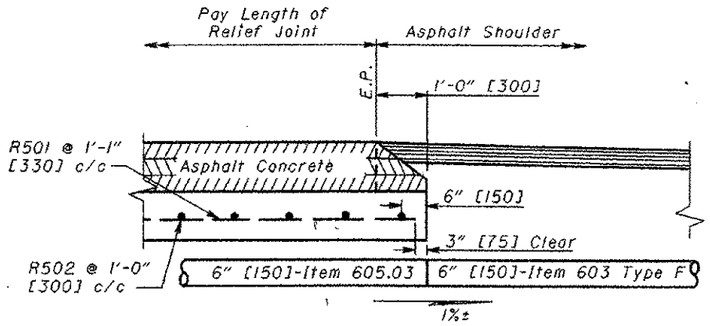

SECTION B-B
(WITH ASPHALT SHOULDERS)

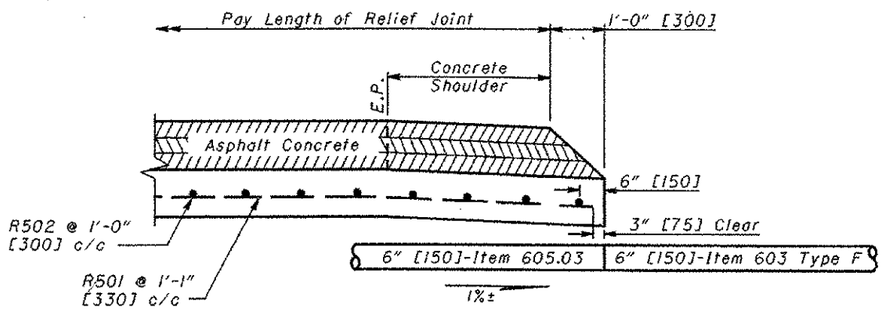

SECTION B-B
(WITH CONCRETE SHOULDERS)

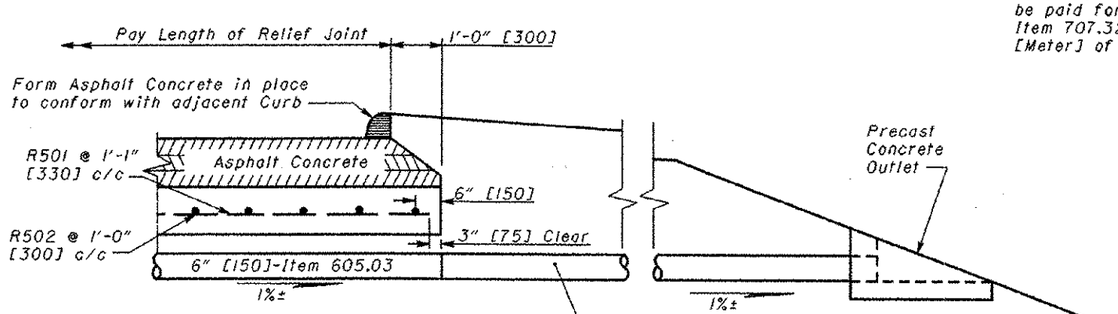

SECTION B-B
(WITH CURB)
(Showing an Underdrain Outlet through the embankment)

NOTES

APPROACH SLAB PRESSURE RELIEF JOINTS: Relief joints are to be provided regardless of abutment design at all bridge approaches where approach pavement is rigid, or composite consisting of a rigid base.

ASPHALT CONCRETE: Item 448 - Asphalt Concrete Intermediate Course, Type 2 PG 64-22 shall be compacted in equal lifts not exceeding 3" [75] with compaction equipment as approved by the Engineer.

ITEM 305 PAVEMENT: shall be constructed in accordance with **SCD BP-2.1 & BP-2.2.** Longitudinal joints shall be placed in the same location and in the same alignment as the longitudinal joints in the existing pavements.

BOND BREAKER: A bond breaker consisting of two 4 foot [1.2 m] sheets of clear or opaque polyethylene film, Item 705.06, shall be centered above the joint between the subbase and the sleeper slab. Care shall be taken in the area beneath the polyethylene film to ensure the surface of the subbase is finished smooth and is flush with or slightly higher than the surface of the sleeper slab. The film shall have a nominal thickness of 4 mils [0.1].

UNDERDRAIN: A perforated underdrain shall be placed as shown. It shall extend from edge to edge of the sleeper slab and be outletted as shown on the plan, either to a longitudinal underdrain, a catch basin, or through the embankment or ditch foreslope. For additional information, see **SCD DM-1.2.**

PAYMENT: Measurement of the pressure relief joint for payment purposes shall be along the centerline of the Sleeper Slab 1) between the outside edges of concrete shoulders, 2) between the backs of curb, and 3) between the edges of pavement when asphalt shoulders are used. Payment shall be per Linear Foot [Meter] of **Item Special - Pressure Relief Joint, Type A** and shall include saw cutting & removal of existing pavement, Items 305 & 448, and all labor, materials and incidentals needed to construct the joint as shown, except for the pipe Underdrain. The Underdrains shall be paid for per Linear Foot [Meter] of **Item 605 - 6" [150] Shallow Pipe Underdrain,** Item 707.32 Type CP, or 707.41. The outlet pipe shall be paid for per Linear Foot [Meter] of **Item 603 - 6" [150] Conduit, Type F.**

THIS DRAWING REPLACES BP-2.3 DATED 7-28-00.

OHIO DEPARTMENT OF TRANSPORTATION
ROADWAY DESIGN ENGINEER
7-16-04
DATE

STDS. ENGR.
D. Focke

All metric dimensions (in brackets [ ]) are in millimeters unless otherwise noted.

ROADWAY ENGINEERING SERVICES

STANDARD ROADWAY CONSTRUCTION DRAWING
PRESSURE RELIEF JOINT TYPE A
(Notes and Section B-B)

NUMBER
BP-2.3

3/3