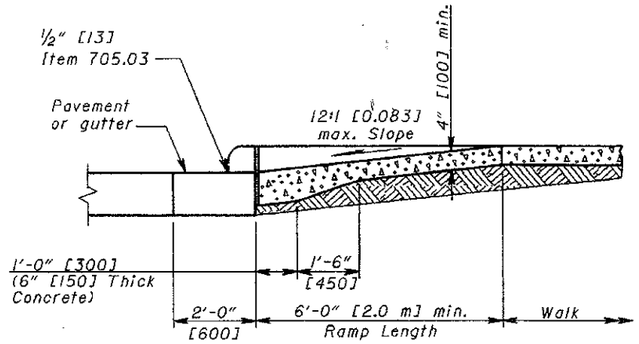

SECTION A-A
NORMAL DETAIL

See Sheet 1 of 3.
(Gutter shown)

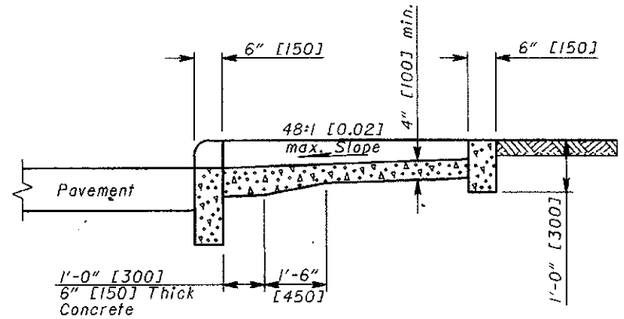

SECTION B-B

See Sheet 1 of 3.

NOTES

SURFACE TEXTURE: Texture shall be obtained by coarse brooming transverse to the ramp slopes and shall be rougher than adjacent walk.

JOINTS: shall be provided in the curb ramp as extensions of walk joints and consistent with Item 608.03 requirements for a new concrete walk. A ½" [13] Item 705.03 expansion joint filler shall be provided around the edge of ramps built in existing concrete walk. Lines shown on this drawing indicate the ramp edge and slope changes and are not necessarily joint lines.

PAYMENT: Walk and curb, Items 608 and 609, shall be measured through the curb ramp area paid for under their respective Items. **Item 608 - Curb Ramp, Each,** constructed in new curb and walk shall include the cost of any additional materials, grading, forming and finishing. **Item 608 - Curb Ramp, Square Foot [Meter],** constructed in existing curb and walk shall include the cost of furnishing all materials, grading, forming, and finishing of the curb and walk of the curb ramp. Removal of existing curb and walk shall be paid for under Item 202.

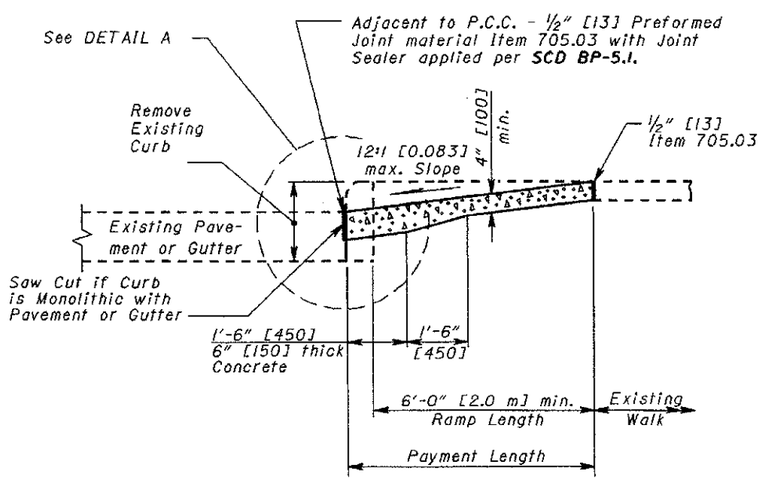

SECTION A-A
EXISTING WALK DETAIL

See Sheet 1 of 3.

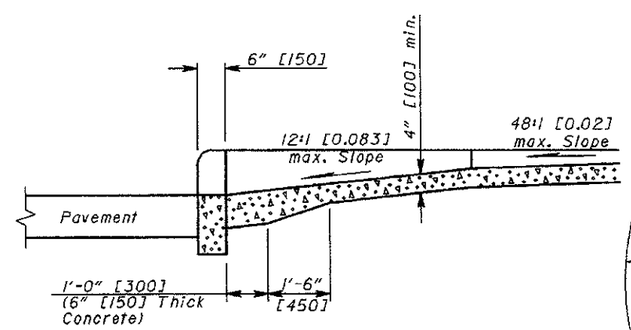

SECTION C-C

See Sheet 1 of 3.

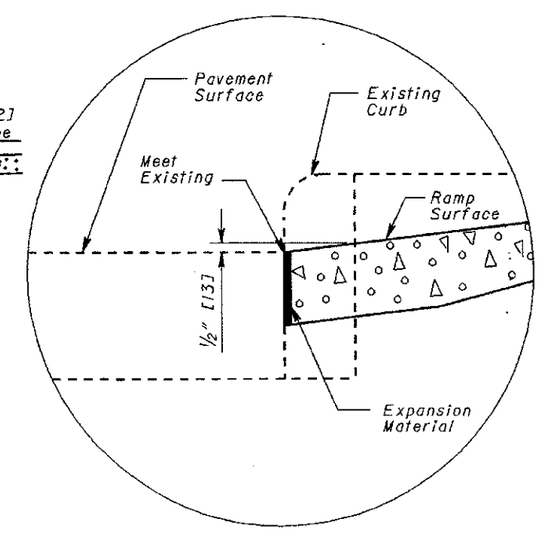

DETAIL A

THIS DRAWING REPLACES BP-7.1M DATED 10-28-94.

OHIO DEPARTMENT OF TRANSPORTATION
ROADWAY DESIGN ENGINEER
DATE 7-28-00

REVISIONS

STDS. ENGR. M. Evans
DRAWN D. Focke

All metric dimensions (in brackets [ ]) are in millimeters unless otherwise noted.

ROADWAY ENGINEERING SERVICES

STANDARD ROADWAY CONSTRUCTION DRAWING
CURB RAMPS

NUMBER BP-7.1

3/3