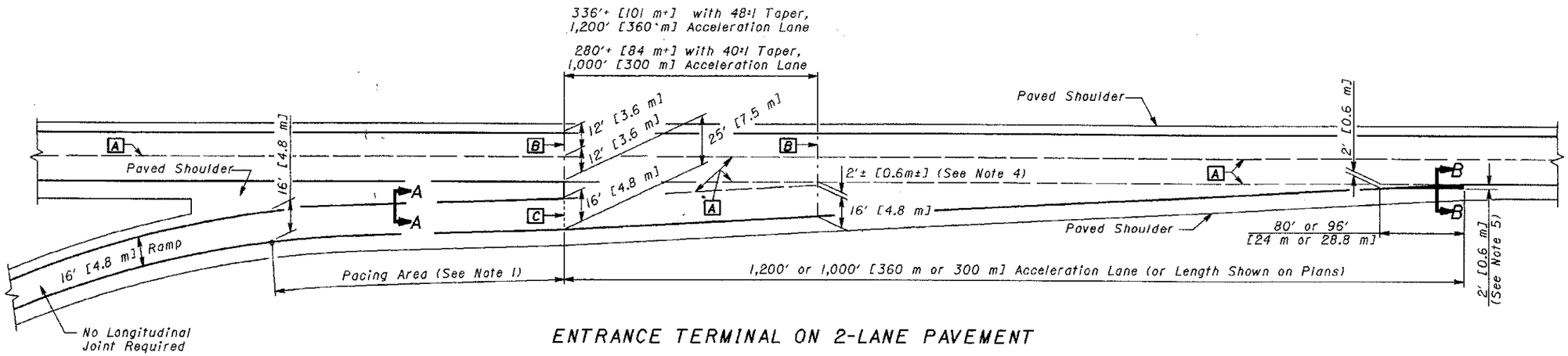

ENTRANCE TERMINAL ON 2-LANE PAVEMENT

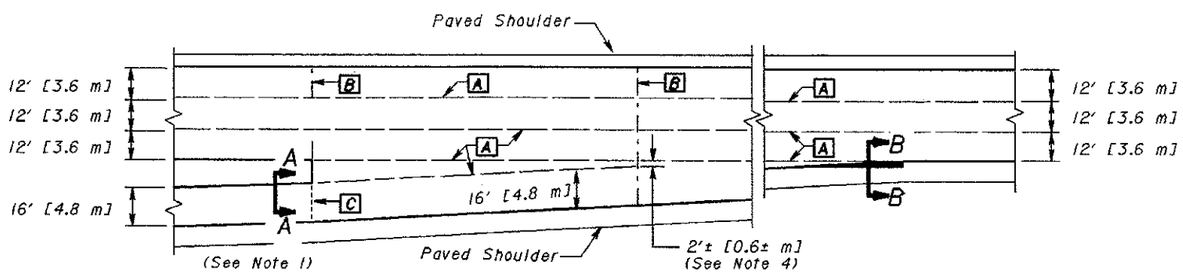

ENTRANCE TERMINAL ON 3-LANE PAVEMENT

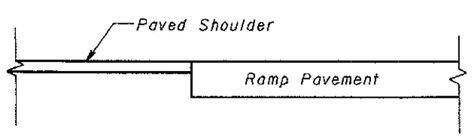

SECTION A-A

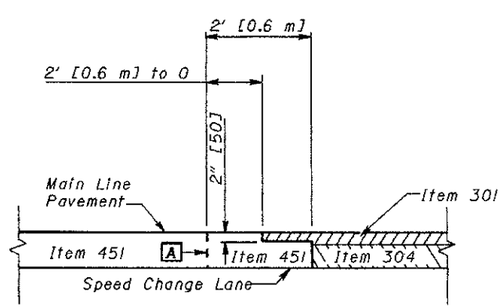

SECTION B-B
(See Note 5)

NOTES

GENERAL: This joint treatment is applicable for mainline and speed change lane pavement constructed of Reinforced Portland Cement Concrete.

1. Although the drawing is based on Class I design standards, it is also applicable to Class II and III standards.

2. Specific location of transverse joints required by the terminal geometrics have been shown. Intervening transverse joints are required per **SCD BP-2.2.** Unless otherwise required, all transverse joints in the speed change lanes are to be continuous in a staight line through the speed change lane and mainline pavement with the exception of the expansion joint at the exit nose which is located radial or normal to the ramp pavement.

3. On 4 lane pavement the joint types and locations shall be as shown for the terminals on 2 and 3 lane pavements with no untied joints, unless otherwise shown on the typical sections.

4. The longitudinal joint which extends the 16' [4.8 m] ramp slab shall end at any mainline contraction joint where the distance between this longitudinal joint at the edge of the 16' [4.8 m] slab and the longitudinal joint at the edge of the mainline pavement is not more than 2'-6" [0.75 m] and not less than 1'-6" [0.45 m].

5. When the mainline shoulders are paved with Item 301 material the shaded area of the end taper shall be constructed of concrete pavement to an elevation 2" [51] lower than the adjacenet pavement and paved with Item 301. The shaded area shall be paid for as full depth Item 451 and the surface treatment shall be paid for as Item 301. For the bituminous surface treated shoulders and turf shoulders along the mainline pavement the shaded area shall be constructed of full depth concrete pavement.

6. Dimension of 2' [0.6 m] has a tolerance of plus or minus 6" [150].

7. For **Exit Terminals,** see Sheet 2 of 2.

JOINT LEGEND

- [A] Longitudinal Joint
- [B] Contraction Joint (See Note 2)
- [C] Expansion Joint (See Note 2)

THIS DRAWING REPLACES BP-6.1M DATED 10-28-94.

OHIO DEPARTMENT OF TRANSPORTATION
ROADWAY DESIGN ENGINEER
DATE 7-28-00

REVISIONS

STDS. ENGR. M. Evans
DRAWN D. Focke

All metric dimensions (in brackets [ ]) are in millimeters unless otherwise noted.

ROADWAY ENGINEERING SERVICES

STANDARD ROADWAY CONSTRUCTION DRAWING
PAVEMENT JOINTS AT RAMP TERMINALS

NUMBER BP-6.1

1/2