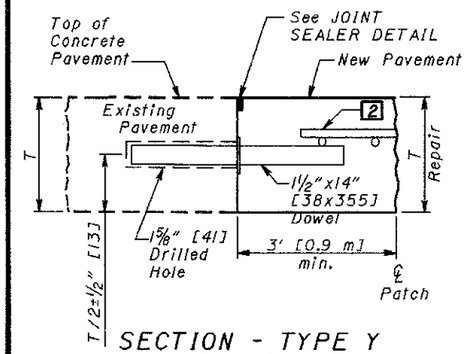

SECTION - TYPE Y
(Contraction)

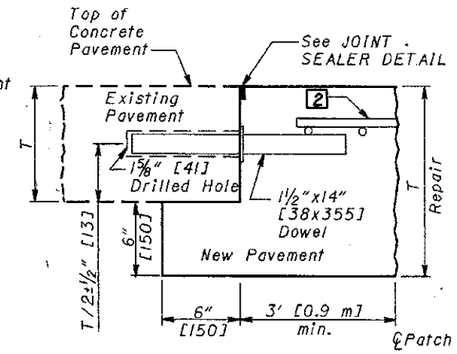

SECTION - TYPE YU
(Undercut + Contraction)

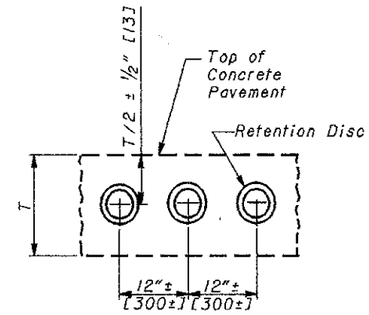

HOLE DRILLING DETAIL

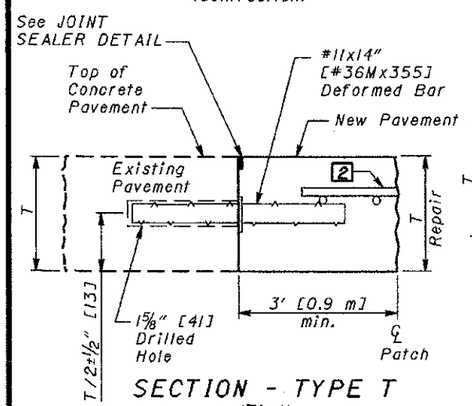

SECTION - TYPE T
(Tied)

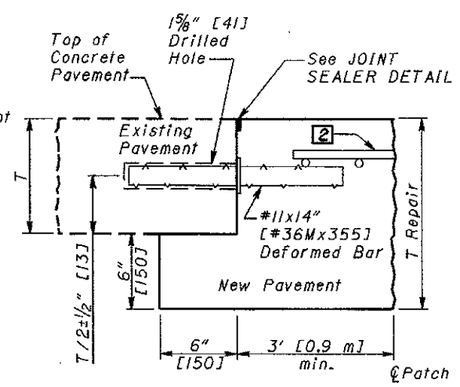

SECTION - TYPE TU
(Undercut + Tied)

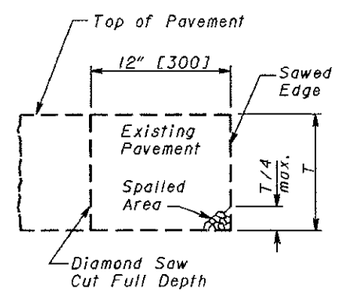

ADDITIONAL PAVEMENT REMOVALS

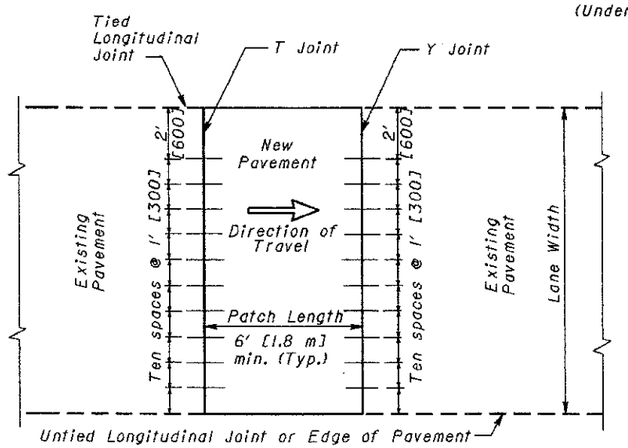

TIE / DOWEL BAR PLACEMENT DETAIL
(See 1 for Bar Placement)

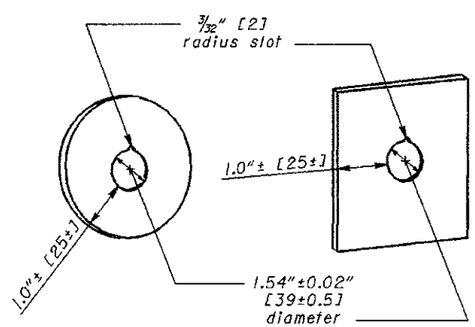

NYLON OR PLASTIC GROUT RETENTION DISCS FOR DOWEL/TIE BARS 3
(1/16" [1.6] min. thickness)

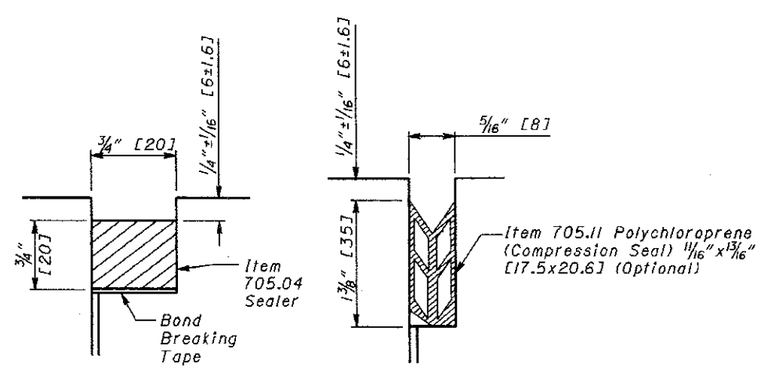

JOINT SEALER DETAIL

NOTES

GENERAL: All joints shall be constructed normal to the centerline of the pavement lane unless otherwise specified in the plans.

All dowel holes shall be drilled by a mechanical device that will allow independent adjustment of all drill shafts in the horizontal and vertical direction. The device shall be capable of drilling a minimum of three holes at a time.

All smooth dowels shall be coated with a thin layer of oil or other "bond-breaking" material after they have been installed in the existing pavement and just prior to placing the patch. All dowels shall be placed parallel to the pavement surface and the centerline of the pavement lane.

This standard drawing is intended for use in repairing both concrete and composite pavements. For clarity, asphalt overlays are not shown.

When Prefabricated Edge Drains are used, they shall be placed after joint repairs are completed.

TYPE N JOINT: Joints referred to as Type N joints on the plan shall be constructed as contraction joints per **SCD BP-2.2.**

ADDITIONAL PAVEMENT REMOVAL: If, after the sawing and removal of the pavement from the area to be repaired, the face of the remaining pavement is spalled or deteriorated for a height greater than one-fourth (1/4) the thickness of the rigid pavement, an additional saw cut shall be made as shown and as directed by the Engineer. This additional work shall be measured for additional payment for full depth pavement sawing, rigid pavement removal and replacement.

LONGITUDINAL JOINT: For patches 10' [3.0 m] or greater in length, the longitudinal joint shall be constructed per **SCD BP-2.1.**

The tie bars or hook bolts shall be spaced at no more than 30" [760] nor less than 24" [610] on center.

LEGEND

1 Bars shall be placed 2' [600] from the tied longitudinal joint and continue across with a 1' [300] spacing to the edge of pavement or an untied longitudinal joint. Where lane widths are between two tied longitudinal joints, begin bars 2' [600] from each tied longitudinal joint and continue across with a 1' [300] spacing.

2 Reinforcement will be required for all repairs greater than 10' [3.0 m] in length or for repairs that will be opened to traffic within 24 hours of placement. The fabric shall consist of W8.5 or D8.5 [MW55 or MD55] longitudinal wires spaced 6" [150] c/c and W4 or D4 [MW26 or MD26] transverse wires spaced 12" [300] c/c. The clearance from the end of the wire fabric to the edge of pavement or new transverse joint shall be 4"±2" [100±50].

3 Nylon or plastic grout retention discs shall be clear or opaque white in color.

THIS DRAWING REPLACES BP-2.5M DATED 4-8-97.

OHIO DEPARTMENT OF TRANSPORTATION
7-28-00
DATE
ROADWAY DESIGN ENGINEER

REVISIONS

STDS. ENGR. M. Evans
DRAWN D. Focke

All metric dimensions (in brackets [ ]) are in millimeters unless otherwise noted.

ROADWAY ENGINEERING SERVICES

STANDARD ROADWAY CONSTRUCTION DRAWING
RIGID REPLACEMENT

NUMBER BP-2.5

1/1