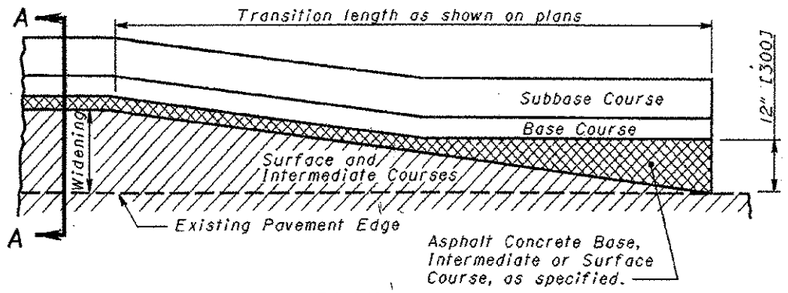

PLAN

MERGING EDGE OF PAVEMENT WIDENING WITH EDGE OF EXISTING PAVEMENT

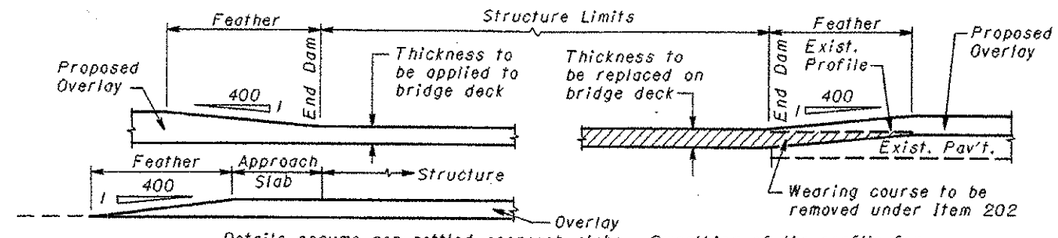

Details assume non-settled approach slabs. Smoothing of the profile for settlement is required per plan grades or as directed by the Engineer.

FEATHERING AT STRUCTURES

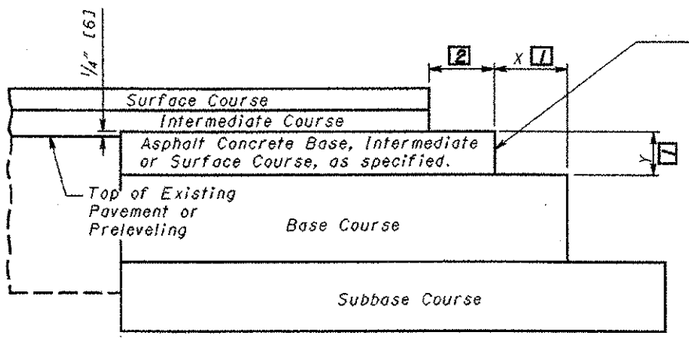

The Asphalt Concrete in the upper part of the base widening shall finish approximately 1/4" [6] above the edge of the existing pavement where no preleveling is used. Where a preleveling (using intermediate course material) is specified it shall be placed prior to excavation of the widening trench and the upper course of the base widening shall finish approximately 1/4" [6] above the preleveling.

SECTION A-A

COURSE DETAIL FOR WIDENING

LEGEND

1. The extended width (X) of a base or subbase course shall be equal to the depth (Y) of the overlaying course or 6" [150], whichever is greater, or as shown on the plans.
2. The extended width shall be equal to the thickness of the surface course plus the intermediate course, or 4 inches [100], whichever is greater.
3. Permissible removal and replacement.

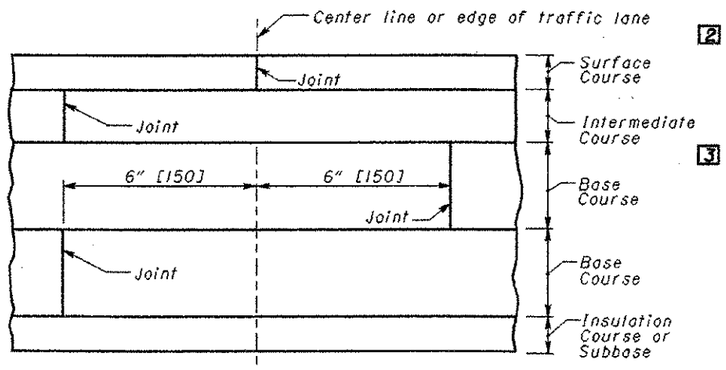

LAPPING LONGITUDINAL JOINTS

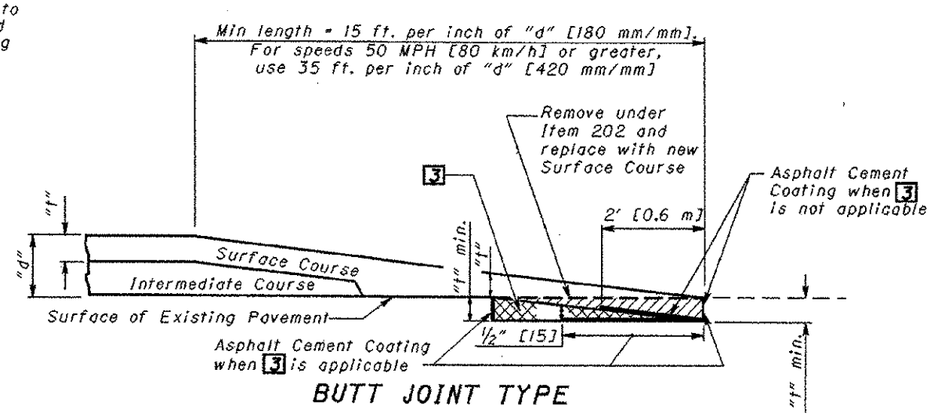

BUTT JOINT TYPE

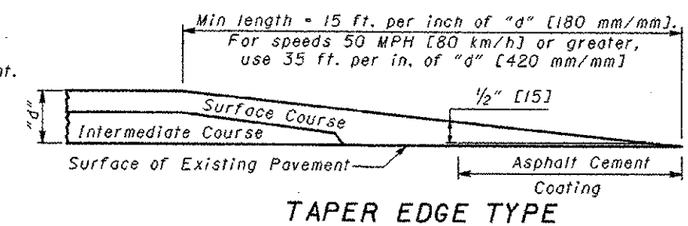

TAPER EDGE TYPE

NOTE: Either butt or taper type may be used unless type is specified by the plan.

PLACING FEATHERED AREAS

Values for "t" and "d" are obtained from the plan.

THIS DRAWING REPLACES BP-3.1 DATED 7-28-00.

OHIO DEPARTMENT OF TRANSPORTATION
ROADWAY DESIGN ENGINEER
7-16-04
DATE

STDS. ENGR. D. Focke

All metric dimensions (in brackets [ ]) are in millimeters unless otherwise noted.

ROADWAY ENGINEERING SERVICES

STANDARD ROADWAY CONSTRUCTION DRAWING
ASPHALT PAVING

NUMBER BP-3.1

1/2