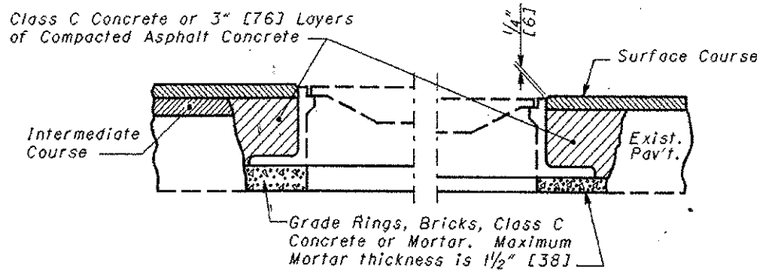

USING CONCRETE OR MORTAR

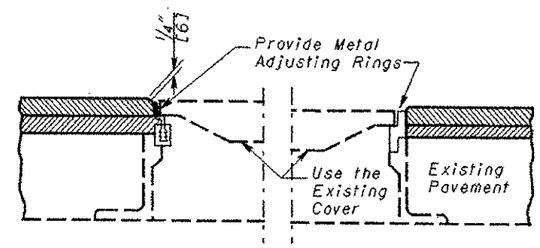

USING METAL ADJUSTING RINGS

Metal adjusting rings shall:
(a) attach securely to the existing frame by welding or mechanical devices;
(b) consist either of cast metal having an integral rim and seat, or be fabricated metal with a sturdy connection between the seat and rim; and
(c) provide an even seat for the manhole cover.

In addition, the adjusting ring type shall be a design acceptable to the local governmental agency responsible for street and sewer maintenance. Any installation unacceptable to the Engineer shall be replaced by the Contractor at his expense.

MANHOLES ADJUSTED TO GRADE

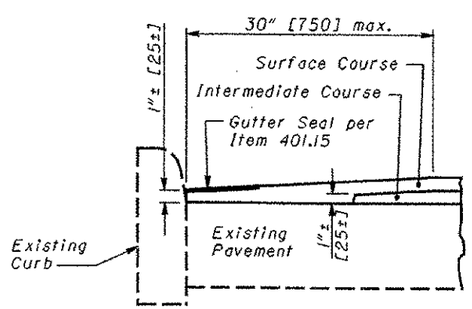

Special care shall be taken during construction to obtain maximum compaction of bituminous concrete in gutters.

GUTTER FINISH

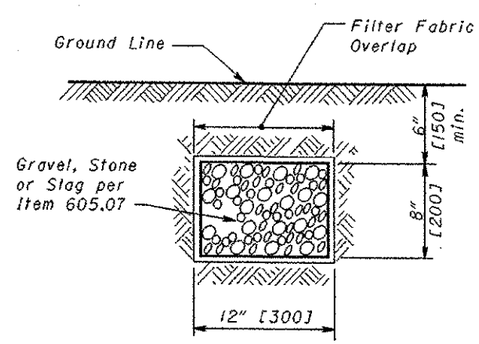

Aggregate drains to be placed where and as directed by Engineer. Provide Filter Fabric when specified as a separate pay item.

AGGREGATE DRAIN

THIS DRAWING REPLACES BP3.1 DATED 7-28-00.

OHIO DEPARTMENT OF TRANSPORTATION
ROADWAY DESIGN ENGINEER
7-16-04
DATE

STDS. ENGR.
D. Focke

All metric dimensions (in brackets [ ]) are in millimeters unless otherwise noted.

ROADWAY ENGINEERING SERVICES

STANDARD ROADWAY CONSTRUCTION DRAWING
ASPHALT PAVING

NUMBER
BP-3.1

2/2