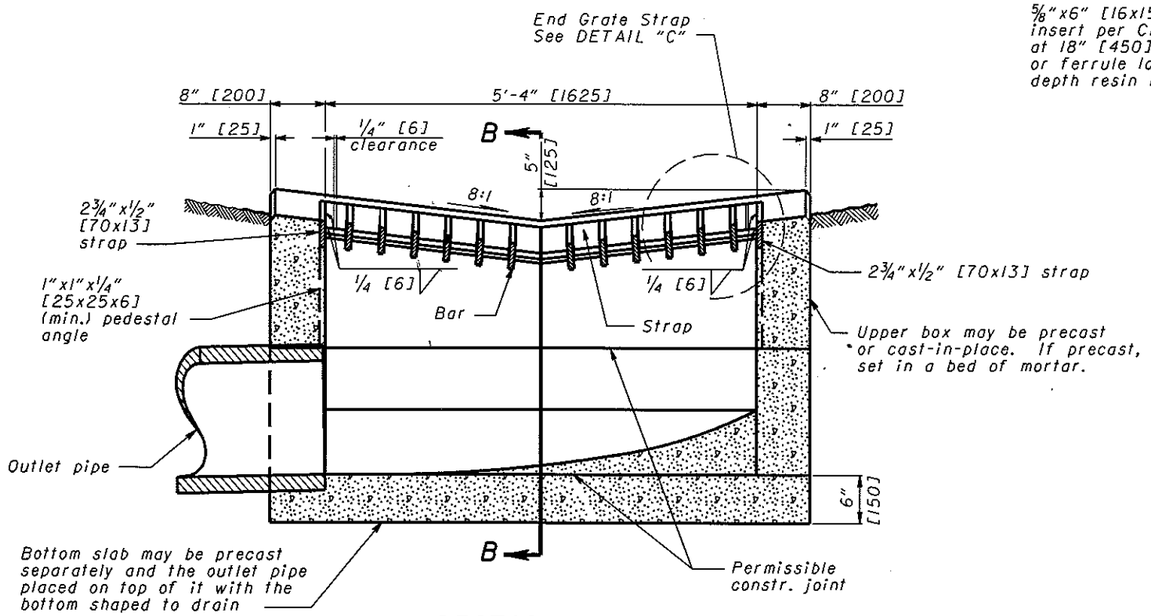

SECTION A-A

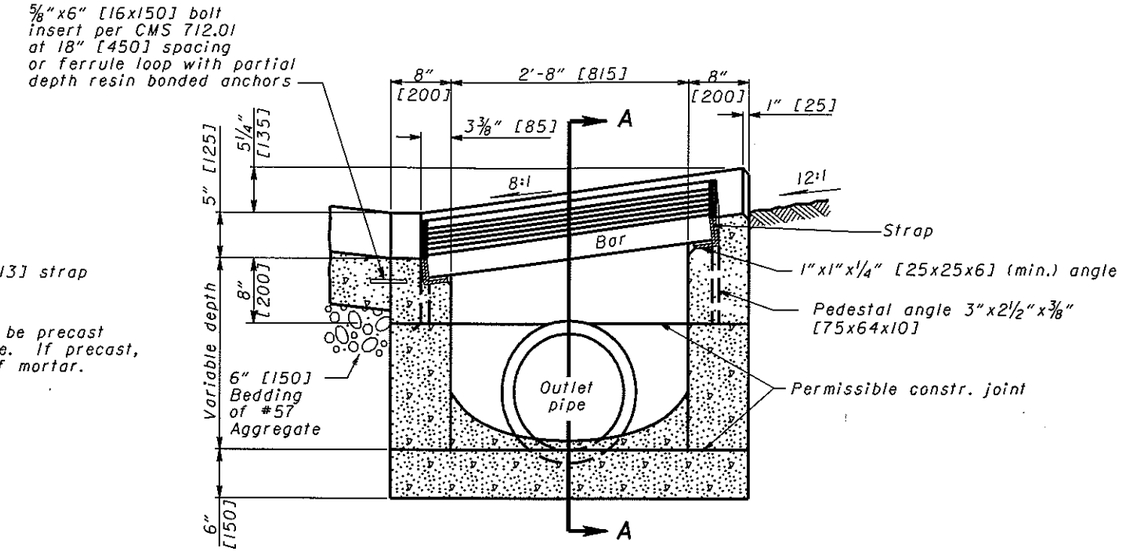

SECTION B-B

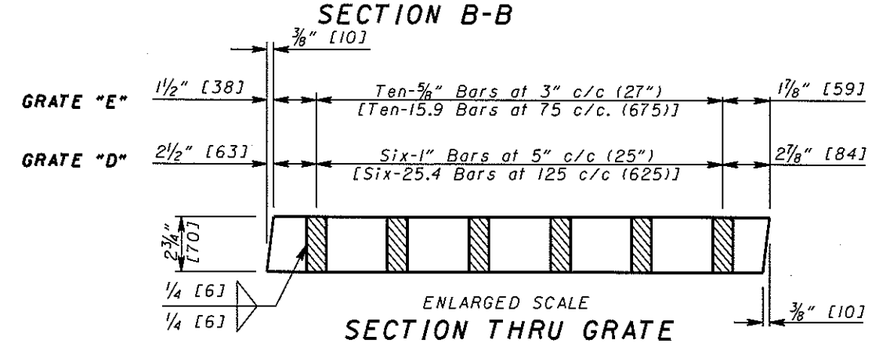

ENLARGED SCALE

SECTION THRU GRATE

(TWO REQUIRED)

See Sht. 2/2 for NOTES

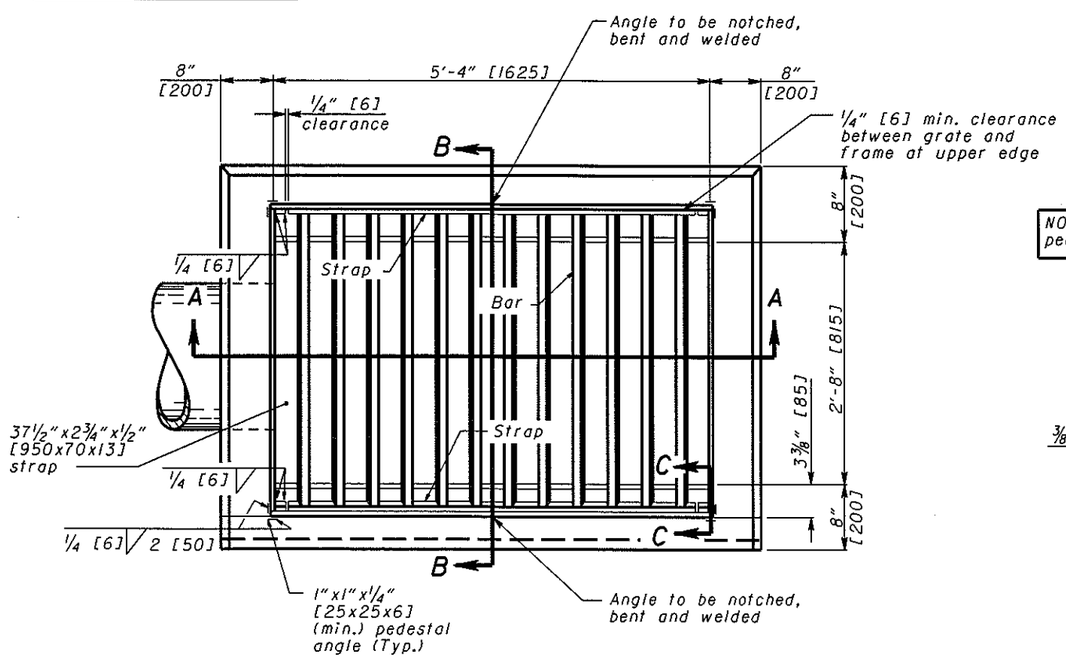

PLAN OF CATCH BASIN

NOTE: 1" x 1" x 1/4" [25x25x6] pedestal angles not shown

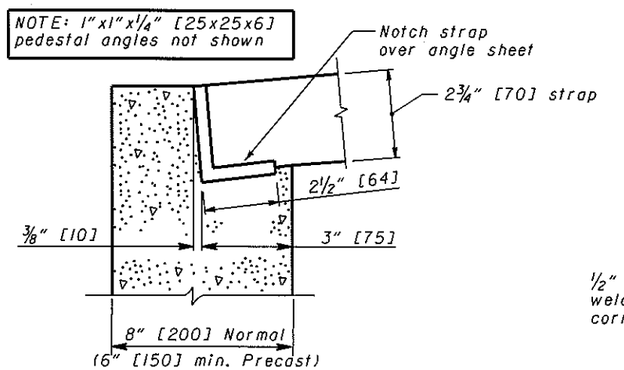

SECTION C-C

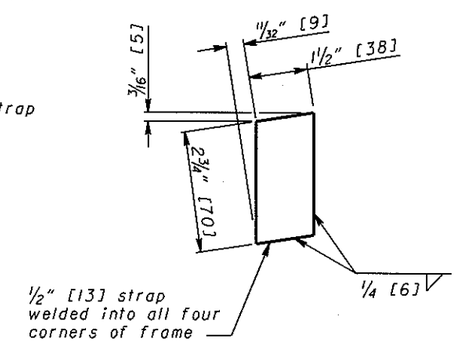

END GRATE STRAP DETAIL "C"

(See SECTION A-A)

CATCH BASIN No. 4

OHIO DEPARTMENT OF TRANSPORTATION

STATE HYDRAULIC ENGINEER

DATE 7-20-01 7-19-02 7-15-05

HYDRAULIC ENGINEER M. Wawszkiewicz

All metric dimensions (in brackets [ ]) are in millimeters unless otherwise noted.

OFFICE OF STRUCTURAL ENGINEERING

STANDARD HYDRAULIC CONSTRUCTION DRAWING

CATCH BASIN No. 4

NUMBER CB-3.1

1/2