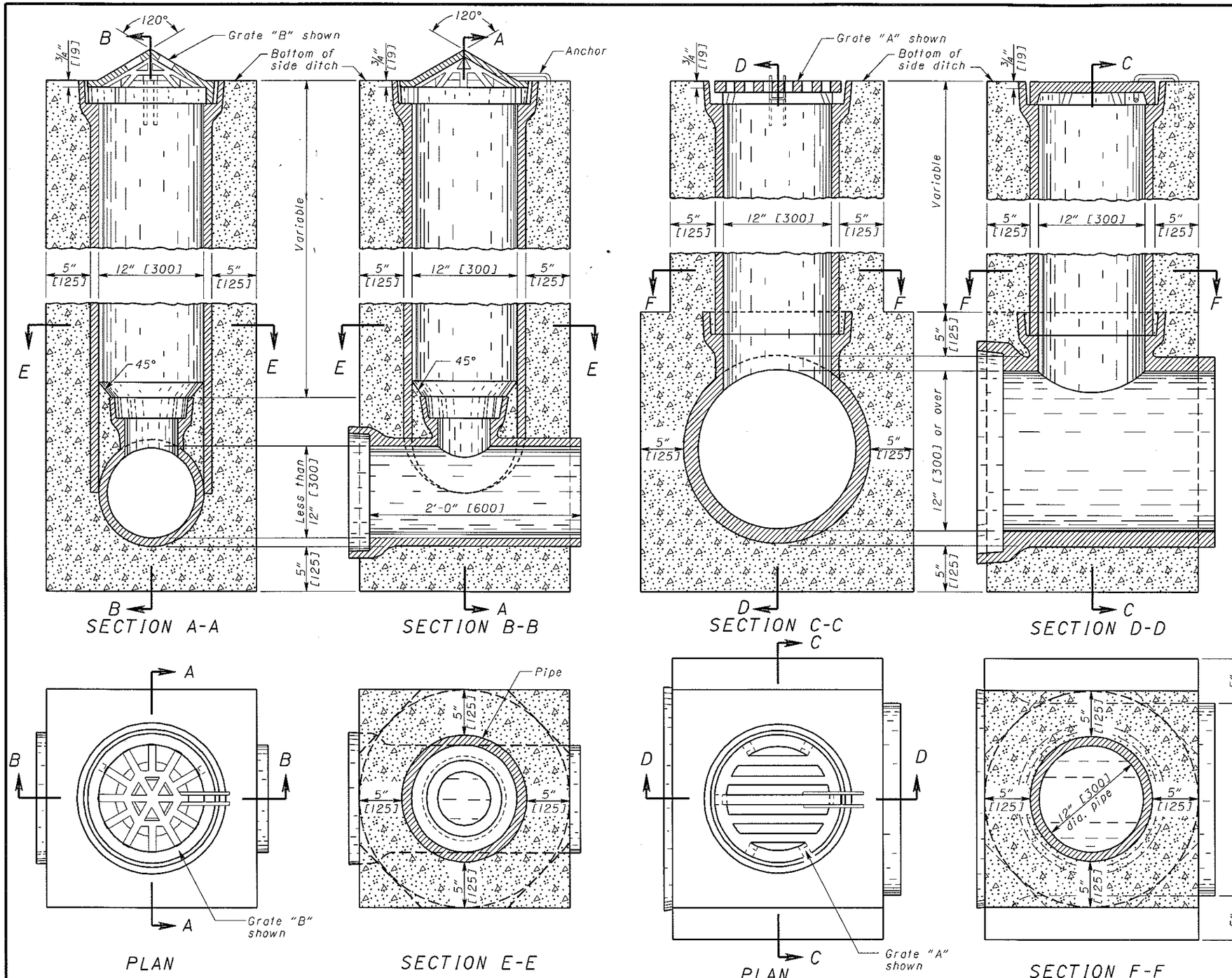

SIDE DITCH INLETS

NOTES

GRATES: Grate "A" shall be provided unless the plans specify Grate "B".

As of January 1, 2003, the following text shall be cast into the top of the grate:

"DUMP NO WASTE" and **"DRAINS TO WATERWAY"**

Text shall be printed in bold, capital letters with a minimum height of ½". "WATERWAY" may be substituted with "STREAM", "RIVER", "LAKE", etc. Actual placement and logo may vary per manufacturer.

CASTINGS: Castings shall meet the requirements of CMS 604. The design shall be essentially the same and equally as strong as the one shown. Minimum weight [mass] shall be 30 lbs. [13.5 kg] for Grate "A" and 20 lbs. [9.0 kg] for Grate "B".

Lighter weight grates that meet the requirements of CMS 711.14 may also be provided. Grate openings and dimensions shall not differ from those shown unless otherwise shown in the plans.

CASTING ANCHOR: Anchor is to be a ⅜" [10] radius 2' [600] long, bent around grate as shown and anchored into concrete casing.

PRECAST CONSTRUCTION: Permitted. Concrete shall meet the requirements of 706.13. Reinforcing shall be sufficient to permit shipping and placement without damage.

LOCATION AND ELEVATION: When given on the plans the location is at the center of the grate. The elevation is at the lowest point on the grate.

CONCRETE CASING: Casing for riser may be square, round or hexagonal in shape. Concrete shall be Class C.

RISER PIPE: Riser shall be 12" [300] in diameter regardless of size of sewer line.

TEE: Where sewer line is not continuous through inlet, the upstream opening of the tee shall be properly plugged using a preformed stopper and sealed joint.

RISER AND TEE: Shall meet the requirements of CMS 603 Type B Pipe Material or be precast as noted above.

PAYMENT: All materials and labor, including excavation and backfilling, shall be paid for under **Item 604 - Inlet, Side Ditch**

OHIO DEPARTMENT OF TRANSPORTATION
ENGINEER OF BRIDGES

DATE
7-20-01
7-19-02

HYDRAULIC ENGINEER
D. Gruver

All metric dimensions [in brackets (]) are in millimeters unless otherwise noted.

OFFICE OF STRUCTURAL ENGINEERING

STANDARD HYDRAULIC CONSTRUCTION DRAWING
SIDE DITCH INLETS

NUMBER
CB-4.2

1/1