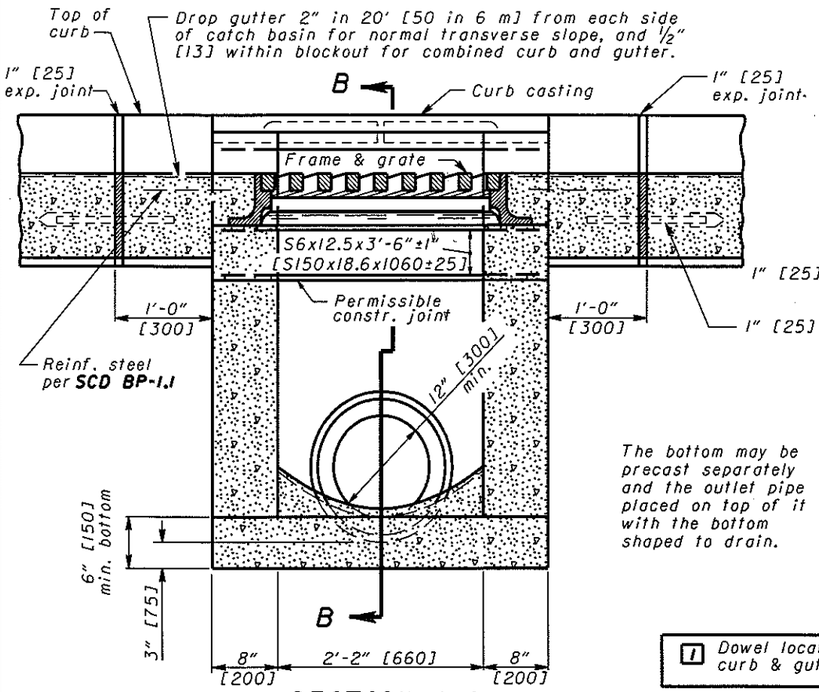

The bottom may be precast separately and the outlet pipe placed on top of it with the bottom shaped to drain.

1 Dowel location for curb & gutter

SECTION A-A

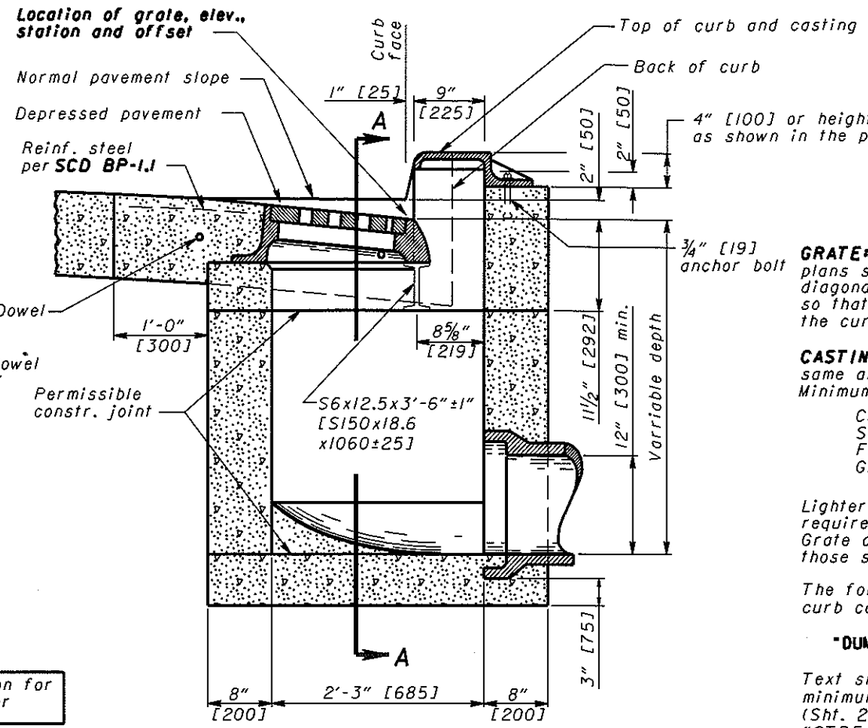

SECTION B-B
WITH CURB
(2" [50] DEPRESSION)

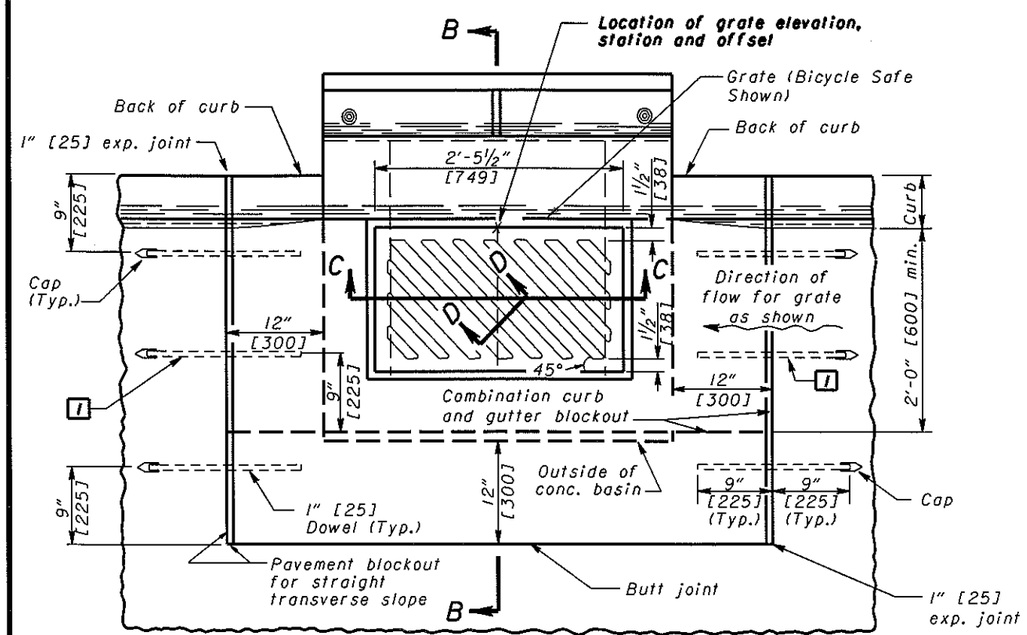

PLAN OF CATCH BASIN AND PAVEMENT JOINTS
(For SECTIONS C-C and D-D, see Sht. 2/2)

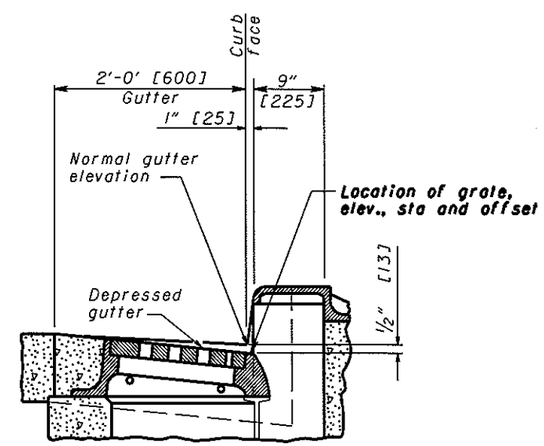

SECTION B-B
WITH CURB & GUTTER
(1/2" [13] DEPRESSION)

NOTES

GRATE: The Grate "V" shall be provided unless the plans specifically require the diagonal grate. If the diagonal grate is specified, it shall be placed so that the diagonal bars direct drainage flow toward the curb. (See Sht. 2/2.)

CASTINGS: The design shall be essentially the same and equally as strong as those shown. Minimum weight [mass]:

Curb Casting . . . . . 170 lbs. [77 kg]
Standard Grate . . . . 127 lbs. [57 kg],
Frame . . . . . 320 lbs. [145 kg], and
Grate "V" . . . . . 105 lbs. [47 kg].

Lighter weight frames and grates that meet the requirements of CMS 711.14 may also be provided. Grate openings and dimensions shall not differ from those shown unless otherwise shown in the plans.

The following text shall be cast into the top of the curb casting:

"DUMP NO WASTE" and **"DRAINS TO WATERWAY"**

Text shall be printed in bold, capital letters with a minimum height of 3/4". See example on Plan (Sht. 2/2). "WATERWAY" may be substituted with "STREAM","RIVER","LAKE", etc. Actual placement and logo may vary per manufacturer.

BEARING AREAS: The frame and grate shall be so fitted and finished as to provide a firm and even seat. No projections shall exist on bearing areas of either casting and the grate shall seat in its frame without rocking.

WALLS: When used in place of concrete, brick side walls shall be 8" [200] nominal thickness.

PRECAST CONSTRUCTION: Permitted, except for the apron. Concrete shall meet the requirements of CMS 706.13. Precast walls shall have a minimum thickness of 6" [150] and reinforcing shall be sufficient to permit shipping and placement without damage. The wall thickness reduction shall be from the outside.

MINIMUM DEPTH: The minimum depth is per the cover requirements for that pipe type.

OPENINGS: Pipe openings shall be the O.D. of the pipe being supplied plus 2" [50] when fabricated or field cut. Fill any voids per CMS 601.

DOWELS: Four 1"x18" [25x450] dowels are required for concrete pavement or gutter blockout. See **SCD BP-2.2** for dowel details.

BLOCKOUT: Blockouts shall be paved with Class C concrete in PCC pavement or gutter and paid for as a part of the pavement or gutter with no deduction in pavement, curb or gutter quanitities because of the castings. A Class C concrete apron the size of the 2'-0" [600] gutter shall be cast-in-place in asphalt pavement (no dowels required) with the cost included in the catch basin bid price. No deduction to be made in curb quantities.

PAYMENT: All materials and labor, including excavation and backfilling, shall be paid for under **Item 604 - Catch Basin, No. 3A.**

CATCH BASIN No. 3A

OHIO DEPARTMENT OF TRANSPORTATION
STATE HYDRAULIC ENGINEER

DATE
7-20-01
7-19-02
7-15-05

HYDRAULIC ENGINEER
W. Wawszkiewicz

All metric dimensions [in brackets [ ]] are in millimeters unless otherwise noted.

OFFICE OF STRUCTURAL ENGINEERING

STANDARD HYDRAULIC-CONSTRUCTION DRAWING
CATCH BASIN No. 3A

NUMBER
CB-2.2