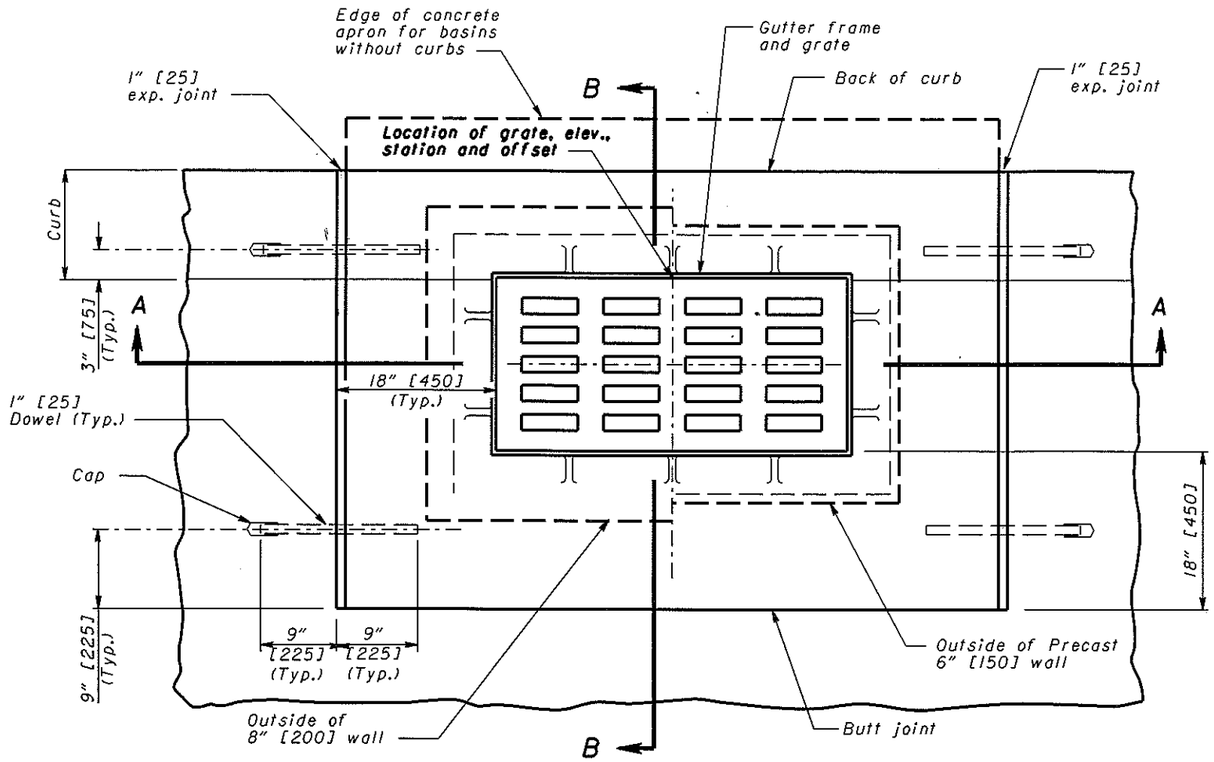

See Sht. 2/2 for Sections

PLAN OF CATCH BASINS AND PAVEMENT JOINTS

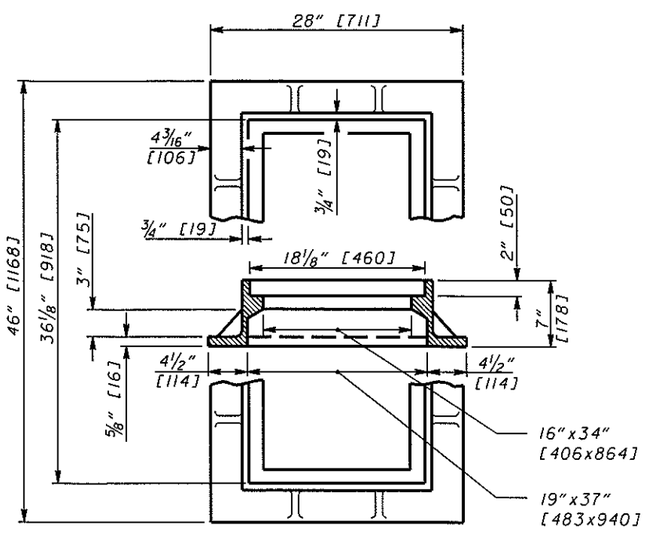

FRAME

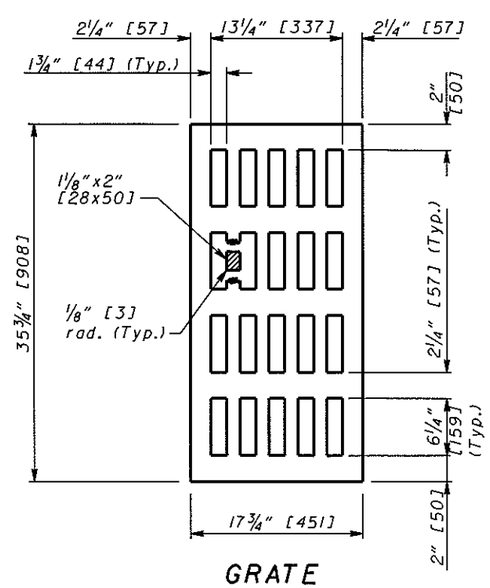

GRATE

NOTES

GRATE AND FRAME: The design shall be essentially the same and equally as strong as the one shown (see construction information table), or meet the requirements of CMS 711.14. Grate openings and dimensions shall not differ from those shown here unless ohterwise shown in the plans.

As of January 1, 2003, the following text shall be cast into the top of the grate:

"DUMP NO WASTE" and **"DRAINS TO WATERWAY"**

Text shall be printed in bold, capital letters with a minimum height of 1/2". "WATERWAY" may be substituted with "STREAM","RIVER","LAKE", etc. Actual placement and logo may vary per manufacturer.

BEARING AREAS: of frame and grate shall be so fitted and finished as to provide a firm and even seat for all portions of the grate in the frame. No projections shall exist on bearing areas of either casting and the grate shall seat in its frame without rocking. Frame and grate shall be fitted, matched and marked before delivery to the project.

WALLS: Brick or cast-in-place walls shall have a nominal thickness of 8" [200]. Precast walls shall have a minimum thickness of 6" [150] and be reinforced sufficiently to permit shipping and handling without damage.

CONCRETE: Cast-in-place concrete shall be Class C. Precast concrete shall meet the requirements of CMS 706.13 and be marked with the catch basin number. The wall thickness reduction shall be from the outside.

MINIMUM DEPTH: The minimun depth shall be the outside diameter (O.D.) of the outlet pipe plus 15" [380].

OPENINGS: Pipe openings shall be the O.D. of the pipe being supplied plus 2" [50] when fabricated or field cut. Fill any voids per CMS 601.

DOWELS: Four 1"x18" [25x450] dowels are required for concrete pavement and curb. See **SCD BP-2.2** for dowel detail.

BLOCKOUT APRONS: Shall be Class C concrete. Cost of apron shall not be included in catch basin bid price when located in PCC pavement, and no deduction in normal pavement quantities shall be made because of the blockout. When adjacent paving is asphalt, the dowels shall be omitted and the cost of the concrete apron shall be included in the catch basin bid price. Cost of curb, if any, shall be included in CMS 609. For basins without curb, the grate elevation shall be 1" [25] below the normal pavement slope measured at the center of the grate.

PAYMENT: All materials and labor, including excavation and backfilling, shall be paid for under **Item 604 - Catch Basin, No. 6.**

CONSTRUCTION INFORMATION
Minimum weight [mass] of grate, 210 lbs. [95 kg]
Minimum weight [mass] of frame, 265 lbs. [120 kg]

OHIO DEPARTMENT OF TRANSPORTATION

STATE HYDRAULIC ENGINEER

DATE
7-20-01
7-19-02
7-15-05

HYDRAULIC ENGINEER
W. Wawszkiewicz

All metric dimensions (in brackets [ ]) are in millimeters unless otherwise noted.

OFFICE OF STRUCTURAL ENGINEERING

STANDARD HYDRAULIC-CONSTRUCTION DRAWING

CATCH BASIN No. 6

NUMBER
CB-2.3