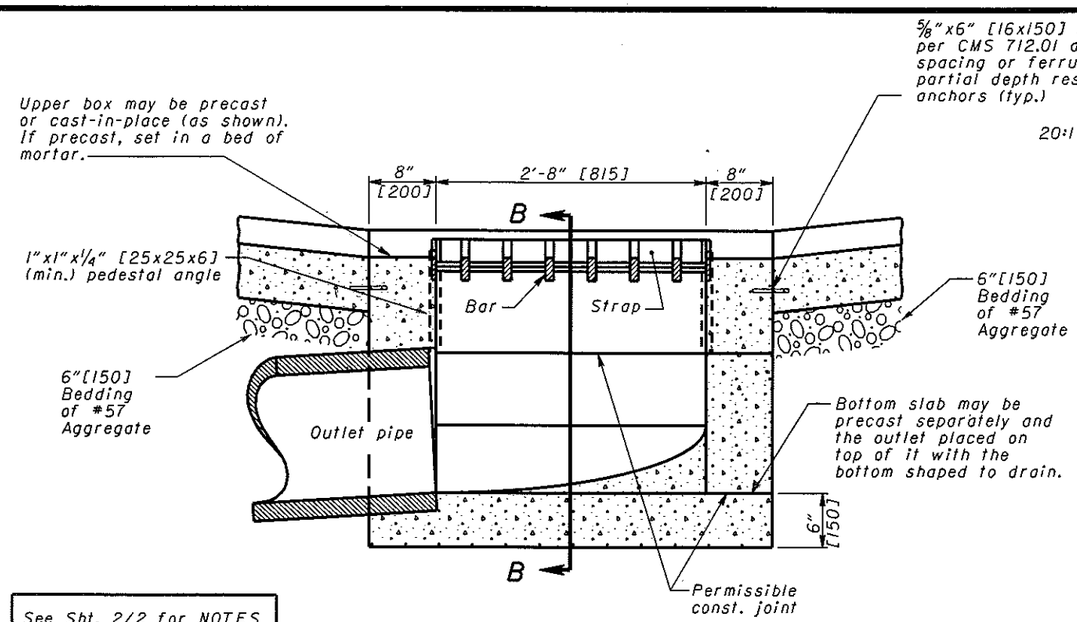

See Sht. 2/2 for NOTES

SECTION A-A

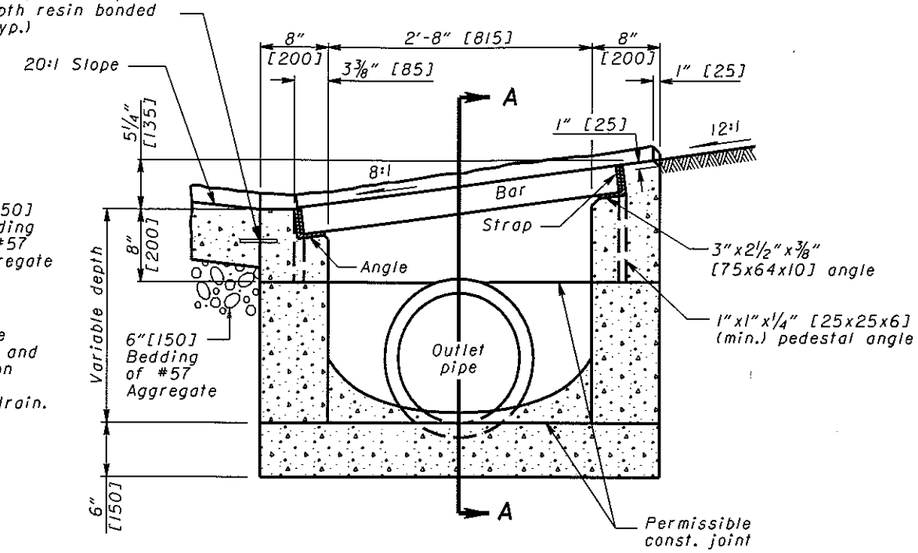

SECTION B-B

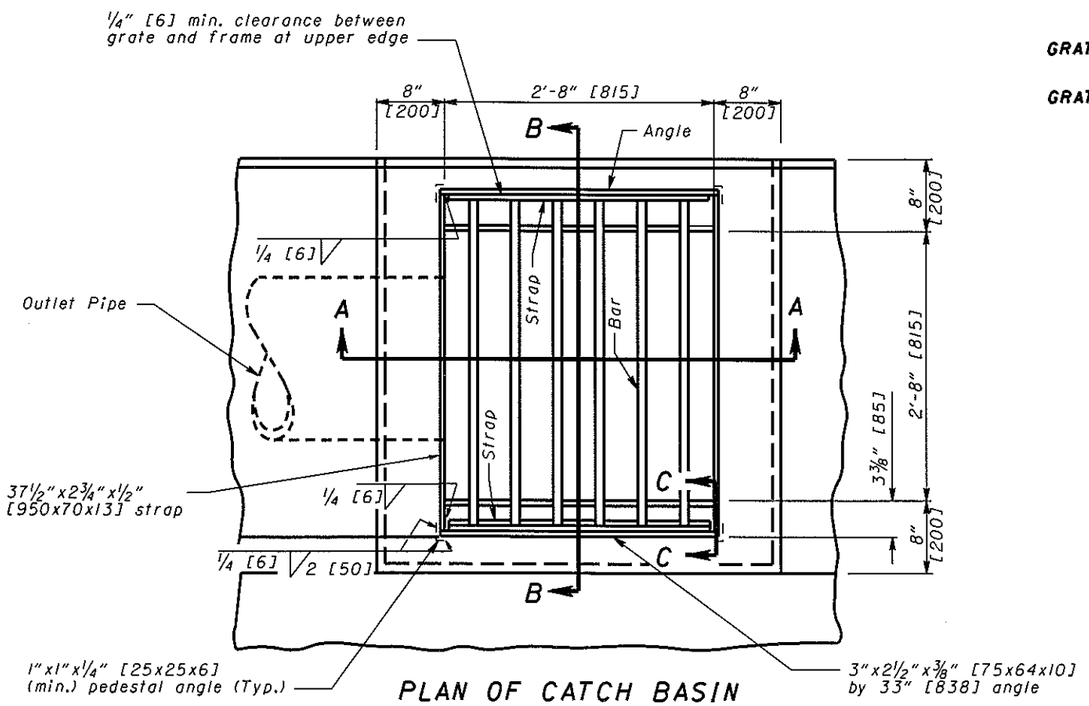

PLAN OF CATCH BASIN

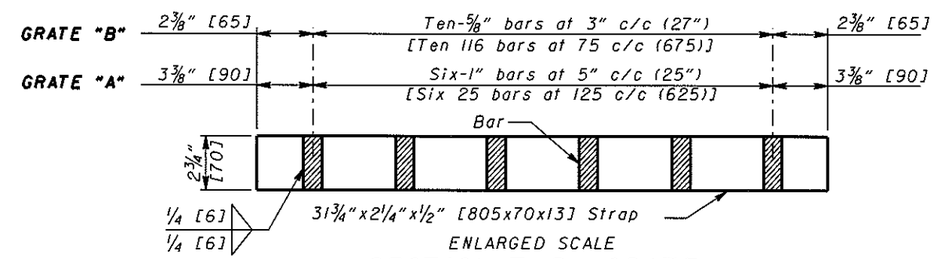

SECTION THRU GRATE

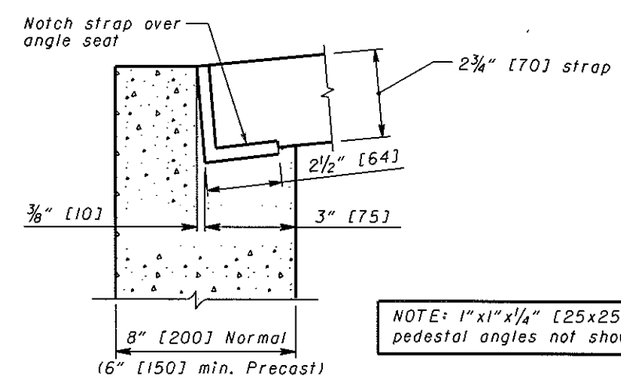

NOTE: 1"x1"x1/4" [25x25x6] pedestal angles not shown

SECTION C-C

CATCH BASIN No. 5

OHIO DEPARTMENT OF TRANSPORTATION

STATE HYDRAULIC ENGINEER

DATE
7-20-01
7-19-02
7-15-05

HYDRAULIC ENGINEER W. Wawszkiewicz

All metric dimensions (in brackets [ ]) are in millimeters unless otherwise noted.

OFFICE OF STRUCTURAL ENGINEERING

STANDARD HYDRAULIC CONSTRUCTION DRAWING

CATCH BASIN No. 5

NUMBER CB-3.2

1/2