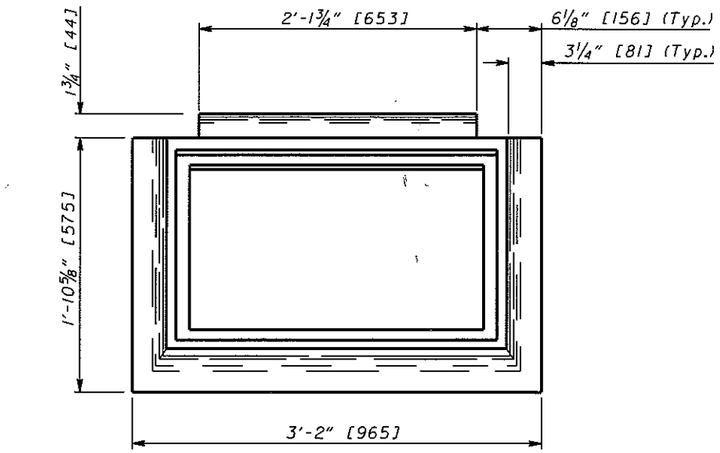

PLAN

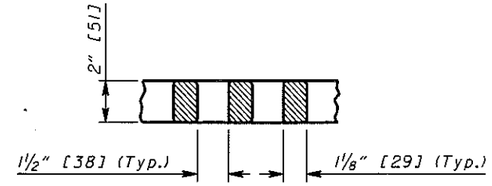

SECTION D-D
(See Sht. 1/2.)

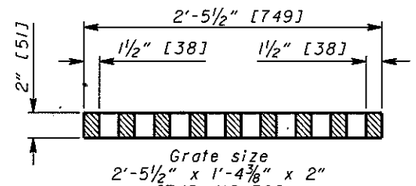

SECTION C-C
DIAGONAL GRATE
(See Sht. 1/2.)

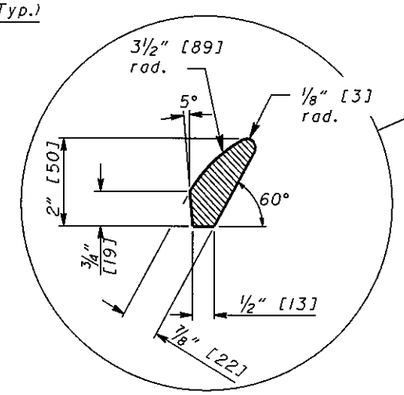

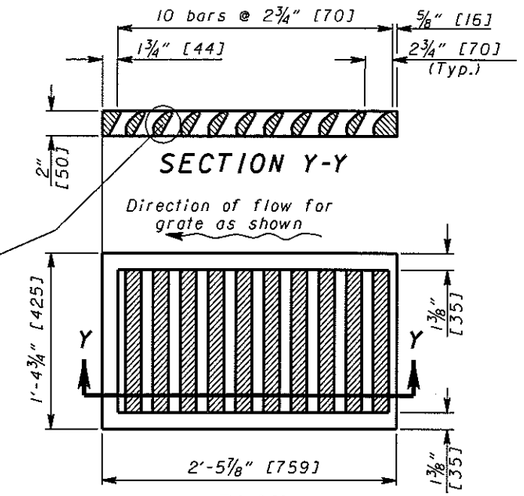

PLAN
GRATE "V"

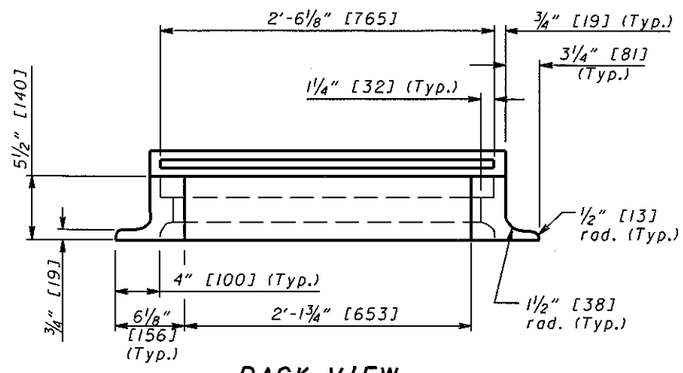

BACK VIEW

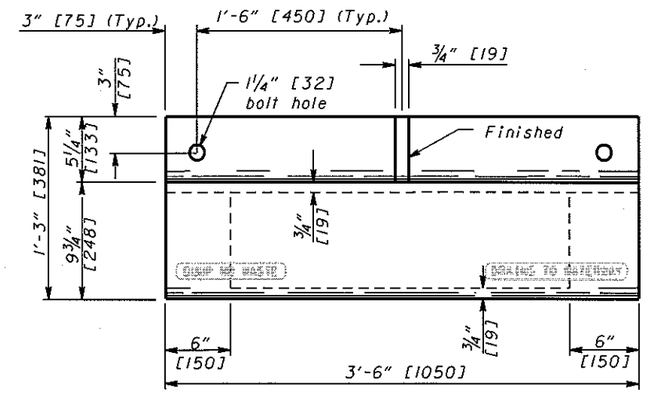

PLAN

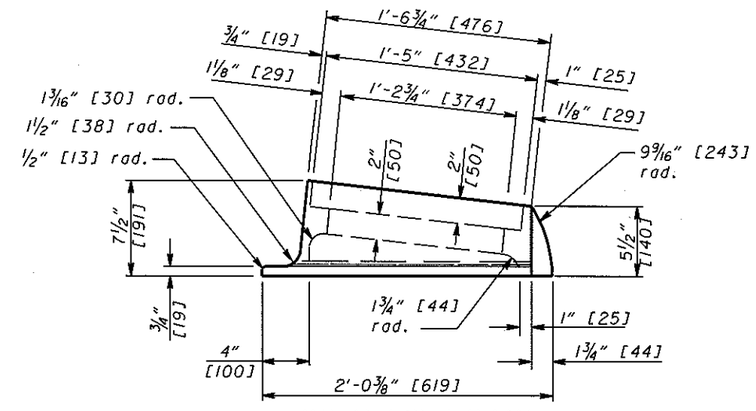

END VIEW FRAME

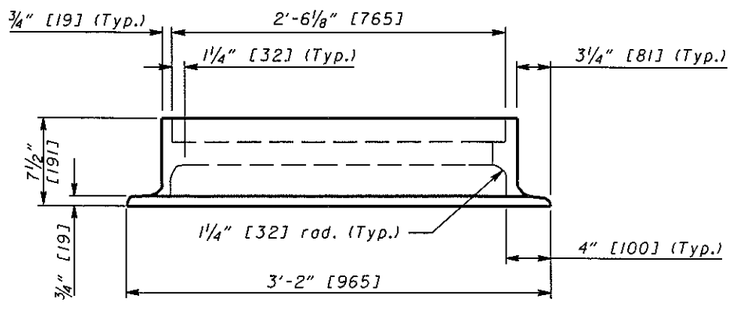

FRONT VIEW
FRAME

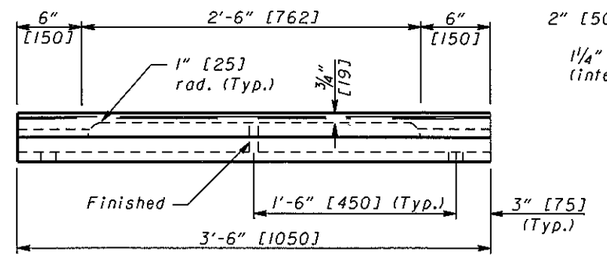

FRONT VIEW
CURB CASTING

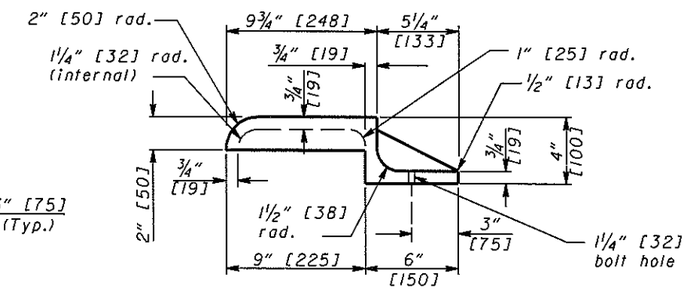

END VIEW
CURB CASTING

OHIO DEPARTMENT OF TRANSPORTATION
STATE HYDRAULIC ENGINEER

DATE
7-20-01
7-19-02
7-15-05

HYDRAULIC ENGINEER
W. Wowszkiewicz

All metric dimensions [in brackets []] are in millimeters unless otherwise noted.

OFFICE OF STRUCTURAL ENGINEERING

STANDARD HYDRAULIC CONSTRUCTION DRAWING
CATCH BASIN No. 3A

NUMBER
CB-2.2

2/2