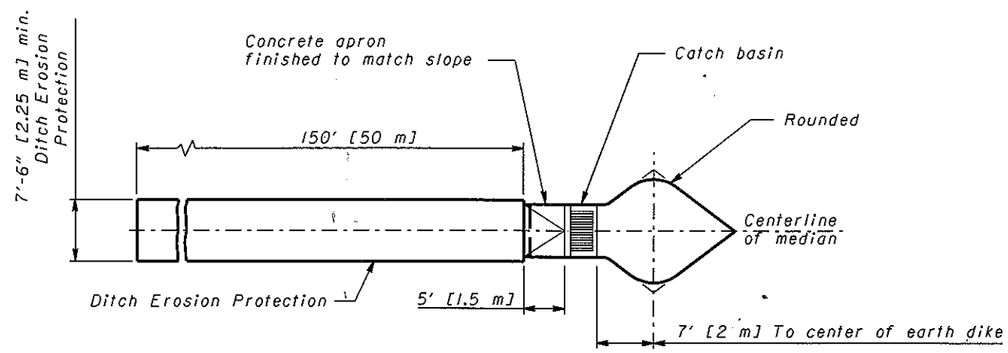

PLAN

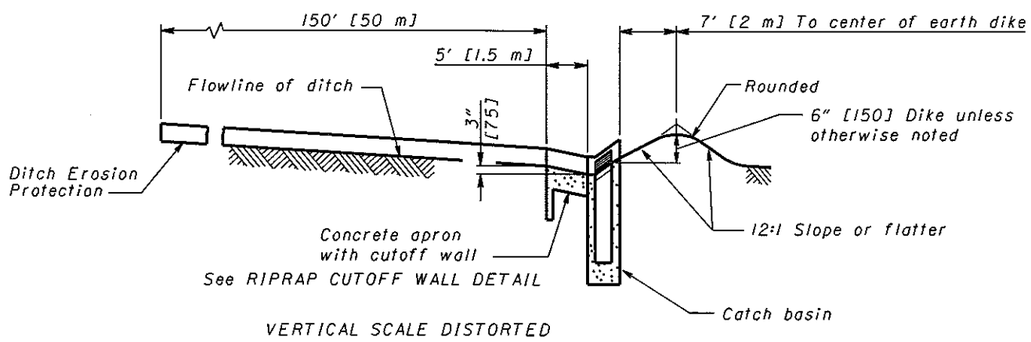

VERTICAL SCALE DISTORTED

PROFILE

MEDIAN GRADING AT CATCH BASIN

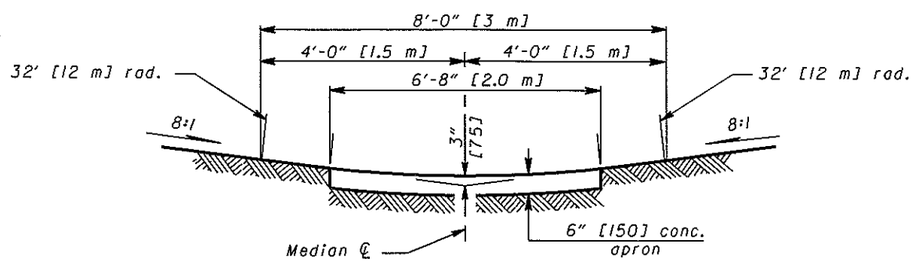

UPSTREAM END VIEW OF
CONCRETE APRON OR GROUTED RIPRAP

CONSTRUCTION INFORMATION
Typical weight [mass] of grate = 375 lbs. [170 kg]
Typical weight [mass] of frame = 100 lbs. [45 kg]

NOTES

GRATE AND FRAME: Shall be of structural steel in accordance with CMS 711.01 and 513. The design shall be essentially the same and equally as strong as the one shown.

GRATE: Shall be depressed 3" [75] below the upstream end of the concrete apron at the centerline of the median. Unless Grate "E" is specifically required by the plans, Grate "D" shall be furnished and installed.

WALLS: Brick or cast-in-place walls shall have a nominal thickness of 8" [200] from the bottom slab to the upper box.

PRECAST CONSTRUCTION: Permitted, except for the apron. Concrete shall meet the requirements of CMS 706.13. Precast walls shall have a minimum thickness of 6" [150] and reinforcing shall be sufficient to permit shipping and placement without damage. The wall thickness reduction shall be from the outside.

STEPS: Steps meeting the requirements of **SCD MH-1.1** shall be provided where the depth exceeds 6' [1.8 m].

BASINS OVER 12 FEET [3.5 m] IN DEPTH: Shall be precast or cast-in-place concrete; reinforced with #4 [#13M] bars on 12" [300] centers both vertically and horizontally with 2" [50] clearance from inside wall face.

LOCATION AND ELEVATION: When given on the plans, location is the center of the grate. The elevation is the lowest point on the grate.

OPENINGS: Pipe openings shall be the outside diameter of the pipe being supplied plus 2" [50] when prefabricated or field cut. Fill any voids per CMS 601.

CONCRETE APRONS: Aprons are to be constructed in such a manner that the outside edges are at equal elevation.

If specified in the plans, grouted riprap may be used in place of the concrete apron.

DITCH PROTECTION: Provide a 150' [50 m] length of ditch erosion protection as shown. Installation and payment for the ditch erosion protection shall comply with CMS 670.

BASINS IN SAG: When in a sag, omit the earth dike and longitudinal slope of the grate, and provide concrete apron and ditch protection on each side of the basin.

PAYMENT: The concrete apron with cutoff wall or grouted riprap and dike shall be considered incidental to **Item 604 - Catch Basin, No. 4.** However, the apron is not required when **Item 604 - Catch Basin, No. 4, Without Apron** is specified.

When itemized separately, payment for Item 601 Riprap using 6" Reinforced Concrete Slab shall include the cost of the cutoff wall.

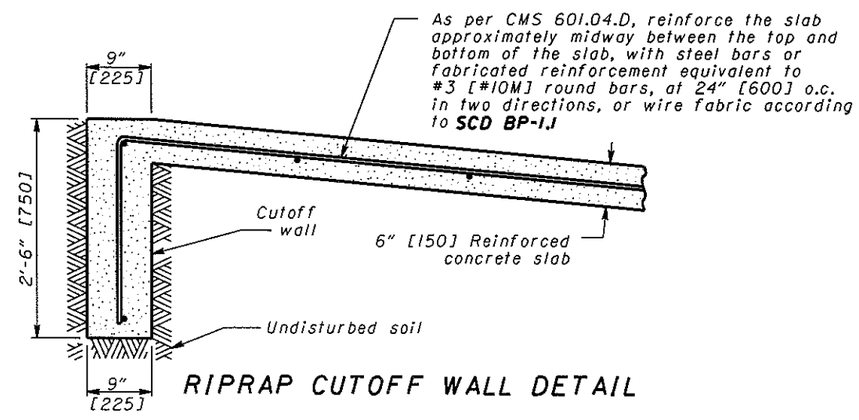

RIPRAP CUTOFF WALL DETAIL

OHIO DEPARTMENT OF TRANSPORTATION

STATE HYDRAULIC ENGINEER

DATE
7-20-01
7-19-02
7-15-05

HYDRAULIC ENGINEER
M. Wowszkiewicz

All metric dimensions (in brackets [ ]) are in millimeters unless otherwise noted.

OFFICE OF STRUCTURAL ENGINEERING

STANDARD HYDRAULIC CONSTRUCTION DRAWING

CATCH BASIN No. 4

NUMBER
CB-3.1

2/2