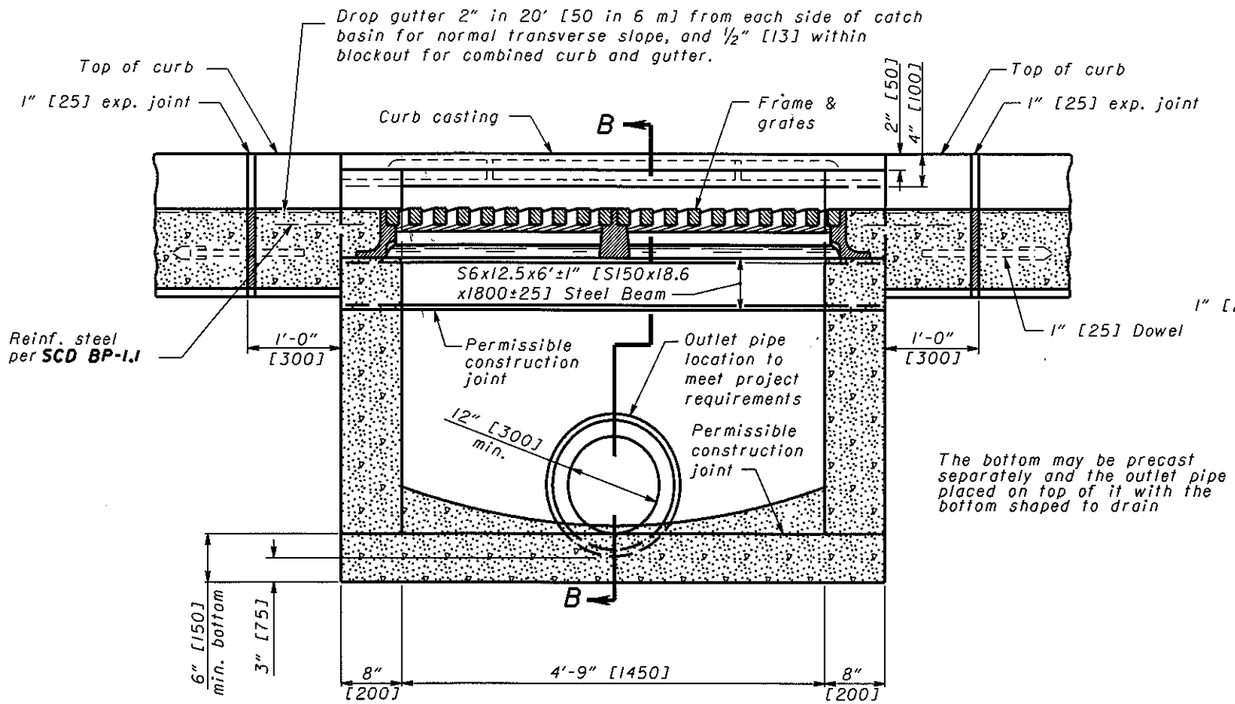

The bottom may be precast separately and the outlet pipe placed on top of it with the bottom shaped to drain

SECTION A-A

1 Dowel location for curb & gutter

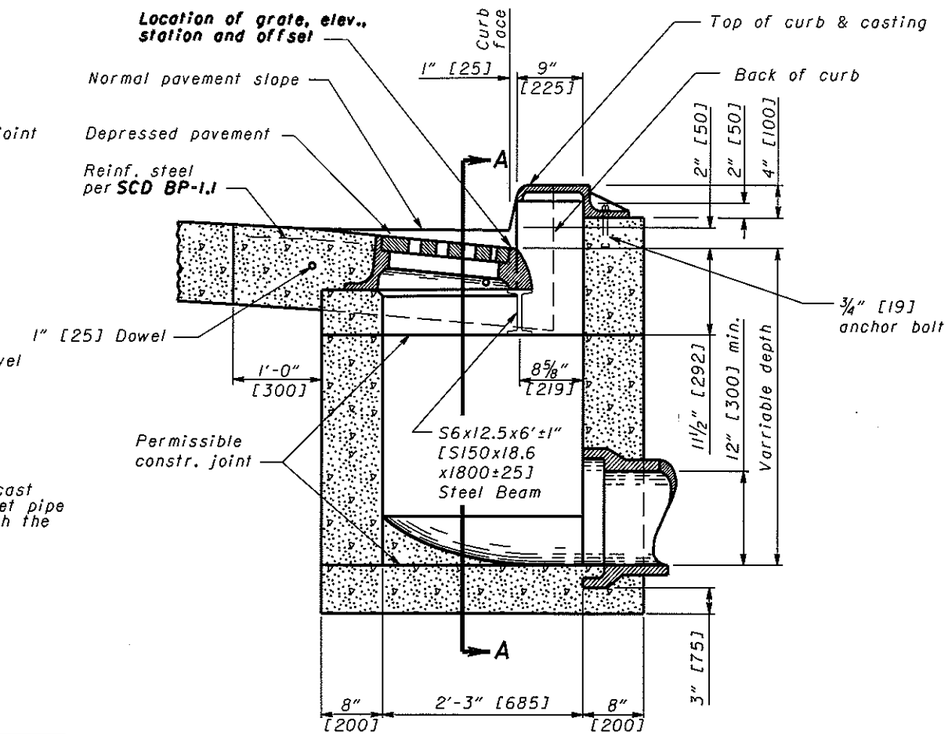

SECTION B-B
WITH CURB
(2" [50] DEPRESSION)

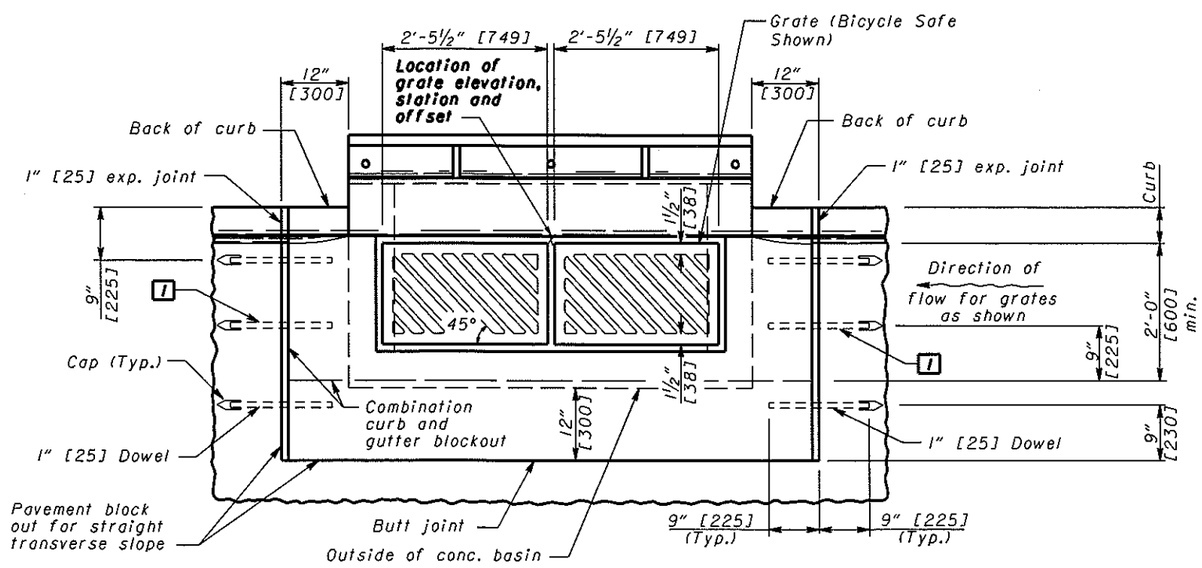

PLAN OF CATCH BASIN AND PAVEMENT JOINTS

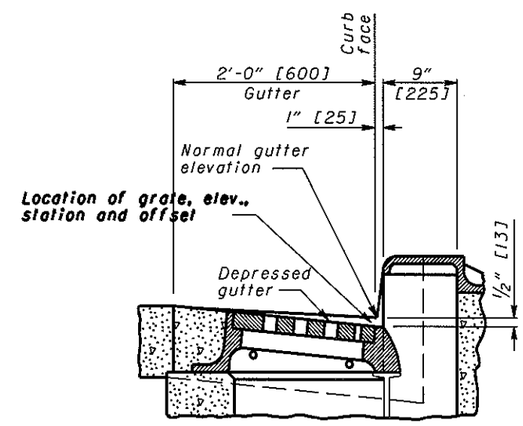

SECTION B-B
WITH CURB & GUTTER
(½" [13] DEPRESSION)

See Sht. 2/2 for NOTES

CATCH BASIN No. 3

OHIO DEPARTMENT OF TRANSPORTATION
STATE HYDRAULIC ENGINEER

DATE
7-20-01
7-19-02
7-15-05

HYDRAULIC ENGINEER
M. Wawszkiewicz

All metric dimensions (in brackets [ ]) are in millimeters unless otherwise noted.

OFFICE OF STRUCTURAL ENGINEERING

STANDARD HYDRAULIC-CONSTRUCTION DRAWING
CATCH BASIN No. 3

NUMBER
CB-2.1