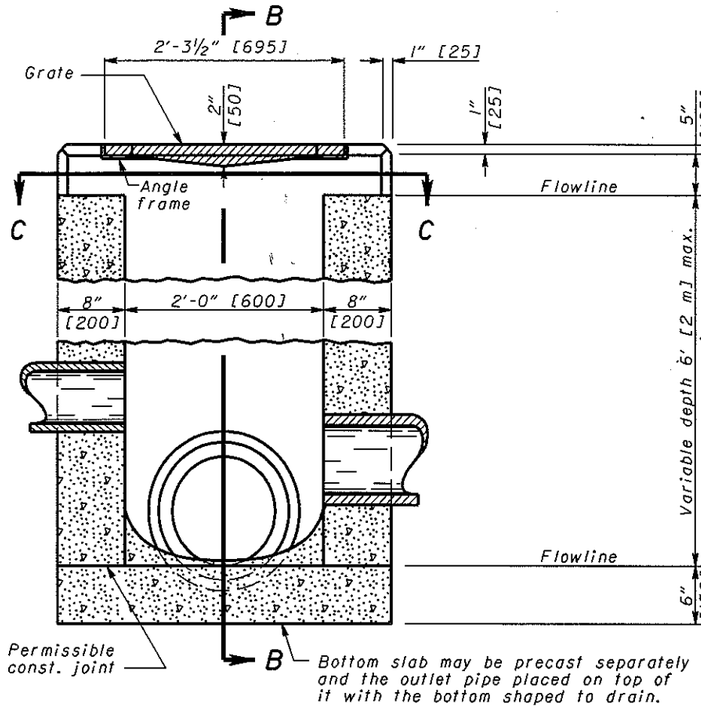

SECTION A-A

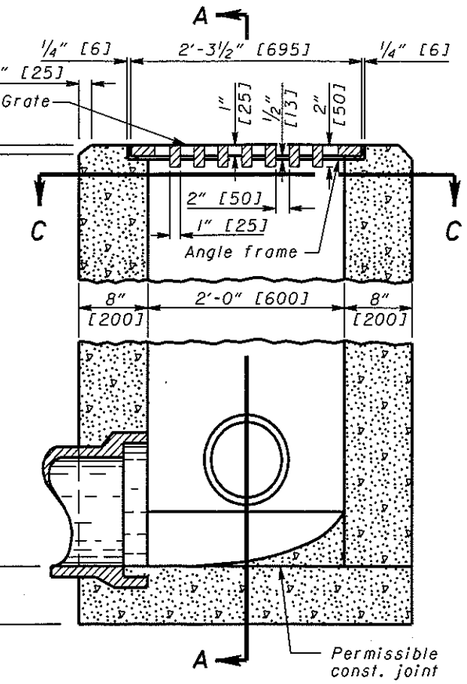

SECTION B-B

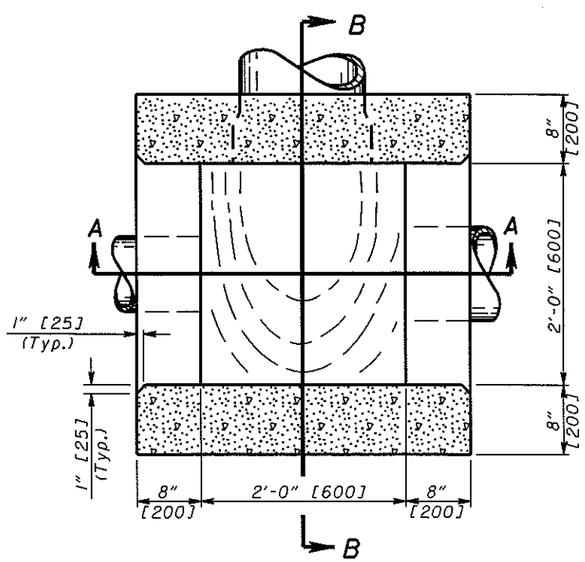

SECTION C-C

All grate edges to be rounded ¼" [6] radii

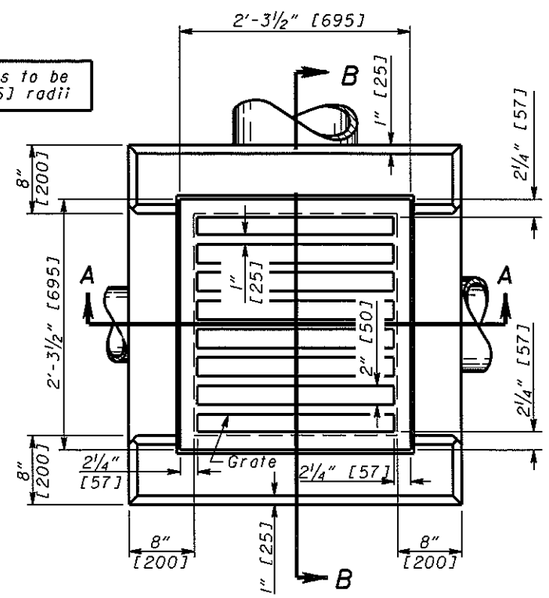

PLAN

CATCH BASIN No. 2-2A

NOTES

GENERAL: Catch Basins 2-2A and 2-2B are not intended for traffic bearing applications.

CATCH BASINS 2-2A & B: This sheet depicts Catch Basin 2-2A. See Sheet 2 of 2 for Catch Basin 2-2B.

GRATE AND FRAME: The design shall be essentially the same and equally as strong as the one shown (see Construction Information table), or meet the requirements of CMS 711.14. Grate openings and dimensions shall not differ from those shown here unless otherwise shown in the plans.

As of January 1, 2003, the following text shall be cast into the top of the grate:

"DUMP NO WASTE" and **"DRAINS TO WATERWAY"**

Text shall be printed in bold, capital letters with a minimum height of ½". "WATERWAY" may be substituted with "STREAM","RIVER","LAKE", etc. Actual placement and logo may vary per manufacturer.

WALLS: Brick or cast-in-place walls have a nominal thickness of 8" [200]. Precast walls shall have a minimum thickness of 6" [150] and be reinforced sufficiently to permit shipping and handling without damage. Brick shall not be used above the flow line of the side opening for Type 2-2A.

CONCRETE: Cast-in-place concrete is to be Class C. All precast concrete shall meet the requirements of CMS 706.13 and marked with the catch basin number.

PRECAST BASE: If a precast base is used, it shall be set deep enough so that the top can be placed on the base to provide the grate elevation specified in the plans. Layers of brick shall not be used to adjust the top elevation.

LOCATION AND ELEVATION: When given on the plans, location is the top center of the grate and the elevation is the flow line of the side inlet.

MINIMUM DEPTH: The minimum depth of CB No. 2-2A shall be the outside diameter (O.D.) of the outlet pipe plus 7" [175].

OPENINGS: Pipe openings shall be the O.D. of the pipe being supplied plus 2" [50] when fabricated or field cut. Fill any voids per CMS 601.

2-2A SIDE INLETS: Inlets shall be provided on both sides of the No. 2-2A catch basin in sags and on upstream side only where the ditch has a continuous down grade past the catch basin. CB 2-2A's shall not be used within the Clear Zone. The flow line should be 4" to 6" [100 to 150] below normal ditch returning to normal 10' to 15' [3 m to 5 m] each side of the inlet.

PAYMENT: All materials and labor, including excavation and backfilling, shall be paid for under **Item 604 - Catch Basin, No. 2-2A.**

CONSTRUCTION INFORMATION
Minimum weight [mass] of grate, 120 lbs. [54 kg]
Minimum weight [mass] of frame, 40 lbs. [18 kg]

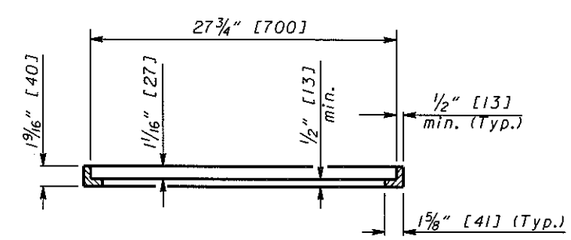

SECTION THRU ANGLE FRAME FOR STANDARD No. 2-2A CATCH BASIN

OHIO DEPARTMENT OF TRANSPORTATION

STATE HYDRAULIC ENGINEER

DATE
7-20-01
7-19-02
7-15-05

HYDRAULIC ENGINEER W. Wowszkiewicz

All metric dimensions [in brackets []] are in millimeters unless otherwise noted.

OFFICE OF STRUCTURAL ENGINEERING

STANDARD HYDRAULIC CONSTRUCTION DRAWING

CATCH BASINS No's 2-2A & B

NUMBER CB-1.1

1/2