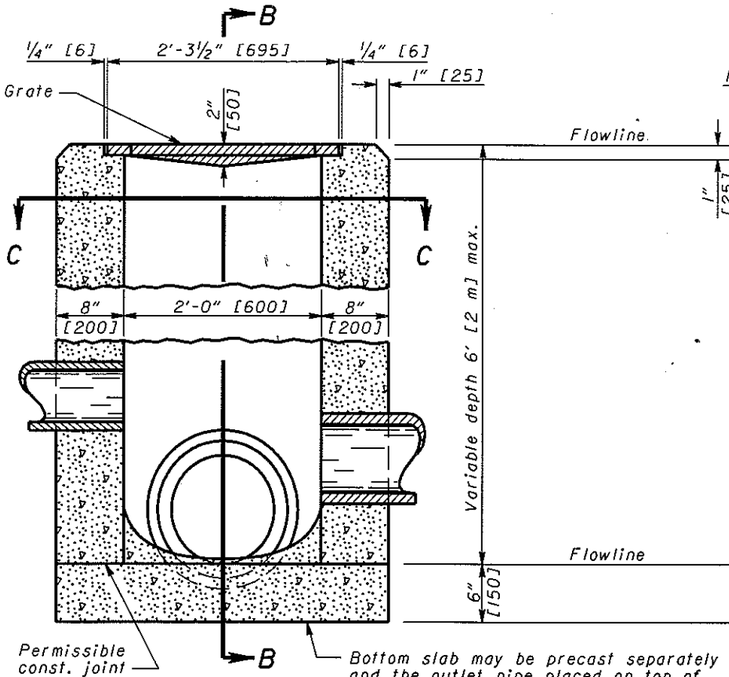

SECTION A-A

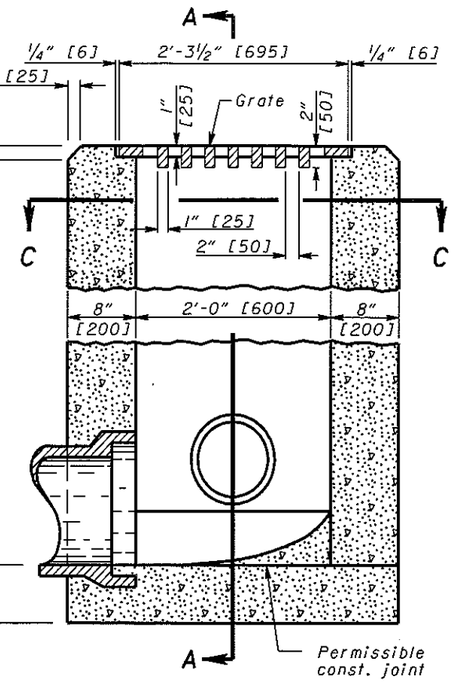

SECTION B-B

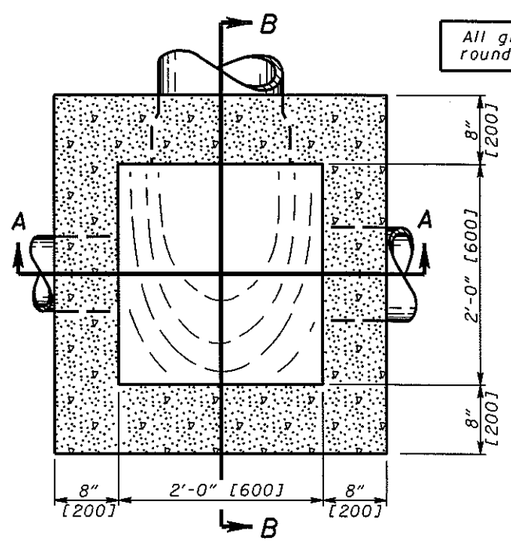

All grate edges to be rounded ¼" [6] radii

SECTION C-C

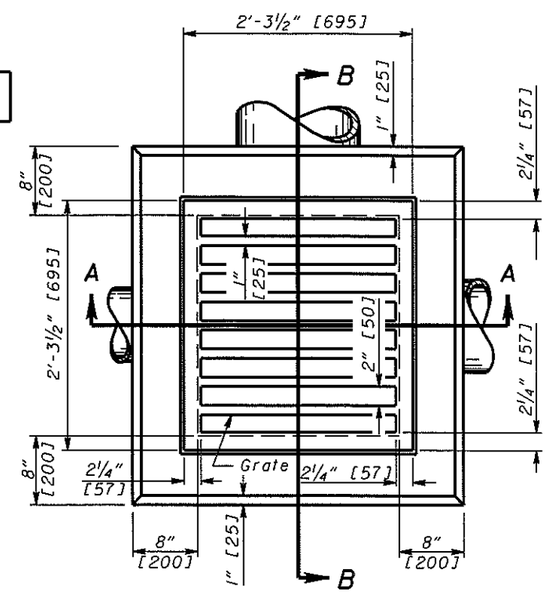

PLAN

CATCH BASIN No. 2-2B

NOTES

CATCH BASINS 2-2A & B: This sheet depicts Catch Basin 2-2B. See Sheet 1 of 2 for Catch Basin 2-2A.

GRATE: The design shall be essentially the same and equally as strong as the one shown (see construction information table), or meet the requirements of CMS 711.14. Grate openings and dimensions shall not differ from those shown unless otherwise shown in the plans.

If necessary, bicycle safe grates shall be specifed in the plans. Bicycle safe grates shall be Neenah No. R-4859-C or East Jordan No. 5110 Type M3 or approved equals.

As of January 1, 2003, the following text shall be cast into the top of the grate:

"DUMP NO WASTE" and **"DRAINS TO WATERWAY"**

Text shall be printed in bold, capital letters with a minimum height of ½". "WATERWAY" may be substituted with "STREAM","RIVER","LAKE", etc. Actual placement and logo may vary per manufacturer.

WALLS: Brick or cast-in-place walls have a nominal thickness of 8" [200]. Precast walls shall have a minimum thickness of 6" [150] and be reinforced sufficiently to permit shipping and handling without damage.

CONCRETE: Cast-in-place concrete is to be Class C. All precast concrete shall meet the requirements of CMS 706.13 and be marked with the catch basin number.

PRECAST BASE: If a precast base is used, it shall be set deep enough so that the top can be placed on the base to provide the grate elevation specified in the plans. Layers of brick shall not be used to adjust the top elevation.

LOCATION AND ELEVATION: When given on the plans, location and elevation are at the top center of the grate. When side openings are provided, the elevation shall be at the flow line of the side inlet.

MINIMUM DEPTH: The minimum depth for CB No. 2-2B shall be the O.D. of the outlet pipe plus 4" [100].

2-2B GRATE ELEVATION: Grate elevation is to be placed 4" to 6" [100 to 150] below normal ditch returning to normal 10' to 15' [3 m to 5 m] each side of inlet.

OPENINGS: Pipe openings shall be the O.D. of the pipe being supplied plus 2" [50] when fabricated or field cut. Fill any voids per CMS 601.

PAYMENT: All materials and labor, including excavation and backfilling, shall be paid for under **Item 604 - Catch Basin, No. 2-2B.**

CONSTRUCTION INFORMATION
Minimum weight [mass] of grate, 120 lbs. [54 kg]

CATCH BASIN	OUTLET PIPE SIZE
2-2A	12" to 21" [300 to 525]
2-2B	12" to 21" [300 to 525]

OHIO DEPARTMENT OF TRANSPORTATION

STATE HYDRAULIC ENGINEER

DATE
7-20-01
7-19-02
7-15-05

HYDRAULIC ENGINEER
W. Wowszkiewicz

All metric dimensions [in brackets []] are in millimeters unless otherwise noted.

OFFICE OF STRUCTURAL ENGINEERING

STANDARD HYDRAULIC CONSTRUCTION DRAWING

CATCH BASINS No's 2-2A & B

NUMBER
CB-1.1