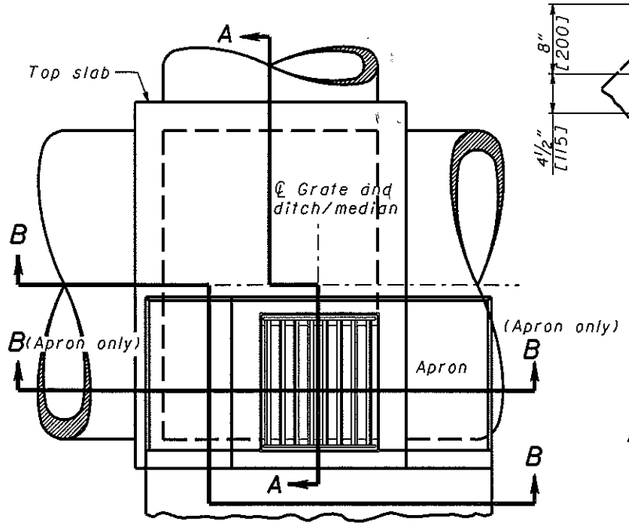

PLAN

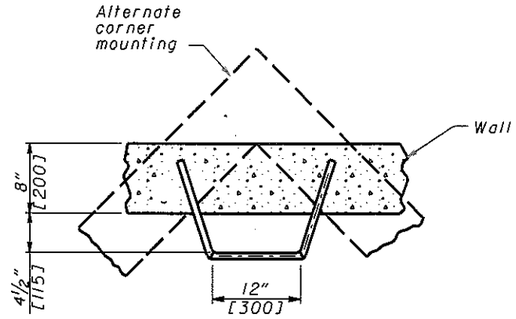

STEP DETAIL

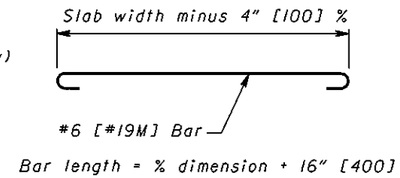

BENDING DIAGRAM

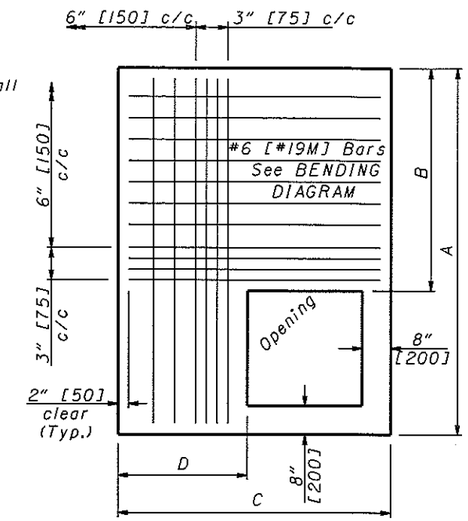

TOP SLAB DETAIL

TOP SLAB DIMENSIONS (English)						
PIPE DIAMETER	CB-4A				CB-5A & 8A	
	A	B	C	D	A or C	B or D
Under 42"	5'-4"	2'-0"	6'-8"	8"	5'-4"	2'-0"
42"	5'-7"	2'-3"	6'-8"	8"	5'-7"	2'-3"
48"	6'-2"	2'-10"	6'-8"	8"	6'-2"	2'-10"
54"	6'-9"	3'-5"	6'-9"	9"	6'-9"	3'-5"
60"	7'-4"	4'-0"	7'-4"	1'-4"	7'-4"	4'-0"
66"	7'-11"	4'-7"	7'-11"	1'-11"	7'-11"	4'-7"
72"	8'-6"	5'-2"	8'-6"	2'-6"	8'-6"	5'-2"

TOP SLAB DIMENSIONS (Metric)						
PIPE DIAMETER	CB-4A				CB-5A & 8A	
	A	B	C	D	A or C	B or D
Under 1050	1625	600	2025	200	1625	600
1050	1700	675	2025	200	1700	675
1200	1875	875	2025	200	1875	875
1350	2050	1050	2050	225	2050	1050
1500	2250	1225	2225	400	2250	1225
1650	2425	1400	2425	575	2425	1400
1800	2600	1575	2600	750	2600	1575

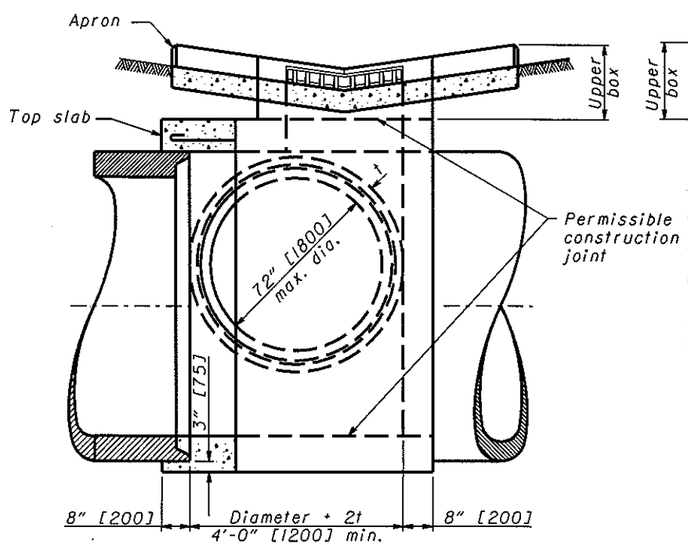

SECTION B-B

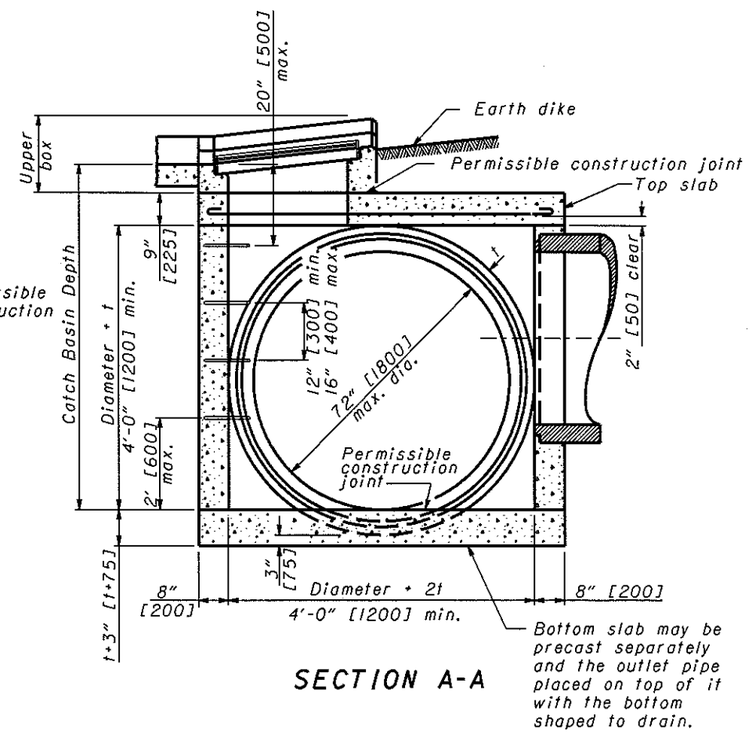

SECTION A-A

CATCH BASINS No. 4A, No. 5A, and No. 8A

NOTES

DESIGN: The lower box, shown here, is designed for use with the upper boxes of **SCD CB-3.1, CB-3.2, and CB-3.3** (shown). See the appropriate drawing for specific details.

WALLS: Brick or cast-in-place walls shall have a nominal thickness of 8" [200] from the bottom slab to the upper box.

PRECAST CONSTRUCTION: Permitted, except for the apron. Concrete shall meet the requirements of CMS 706.13. Precast walls shall have a minimum thickness of 6" [150] and reinforcing shall be sufficient to permit shipping and placement without damage. The wall thickness reduction shall be from the outside.

STEPS: Steps meeting the requirements of **SCD MH-1.1** shall be provided where the depth exceeds 6' [1.8 m].

BASINS OVER 12 FEET [3.5 m] IN DEPTH: Shall be precast or cast-in-place concrete; reinforced with #4 [#13M] bars on 12" [300] centers both vertically and horizontally with 2" [50] clearance from inside wall face.

LOCATION AND ELEVATION: When given on the plans, the location is the center of the grate. The elevation is the lowest point on the grate.

OPENINGS: Pipe openings shall be the outside diameter of the pipe being supplied plus 2" [50] when prefabricated or field cut. Fill any voids per CMS 601.

CONCRETE APRONS: Aprons are to be constructed in such a manner that the outside edges are at equal elevation.

If specified in the plans, grouted riprap may be used in place of the concrete apron.

DITCH PROTECTION: Provide a 150' [50 m] length of ditch erosion protection as shown. Installation and payment for ditch erosion protection shall comply with CMS 670.

BASINS IN SAG: When in a sag, omit the earth dike and longitudinal slope of the grate, and provide concrete apron and ditch protection on each side of the basin.

PAYMENT: The concrete apron with cutoff wall or grouted riprap and dike shall be considered incidental to **Item 604 - Catch Basins.** However, the apron is not required when **Item 604 - Catch Basins, Without Apron,** is specified.

OHIO DEPARTMENT OF TRANSPORTATION
STATE HYDRAULIC ENGINEER

DATE
7-20-01
7-19-02
7-15-05

HYDRAULIC ENGINEER
W. Wawszkiewicz

All metric dimensions [in brackets] are in millimeters unless otherwise noted.

OFFICE OF STRUCTURAL ENGINEERING

STANDARD HYDRAULIC CONSTRUCTION DRAWING
CATCH BASINS No's 4A, 5A, 8A

NUMBER
CB-3.4

1/1