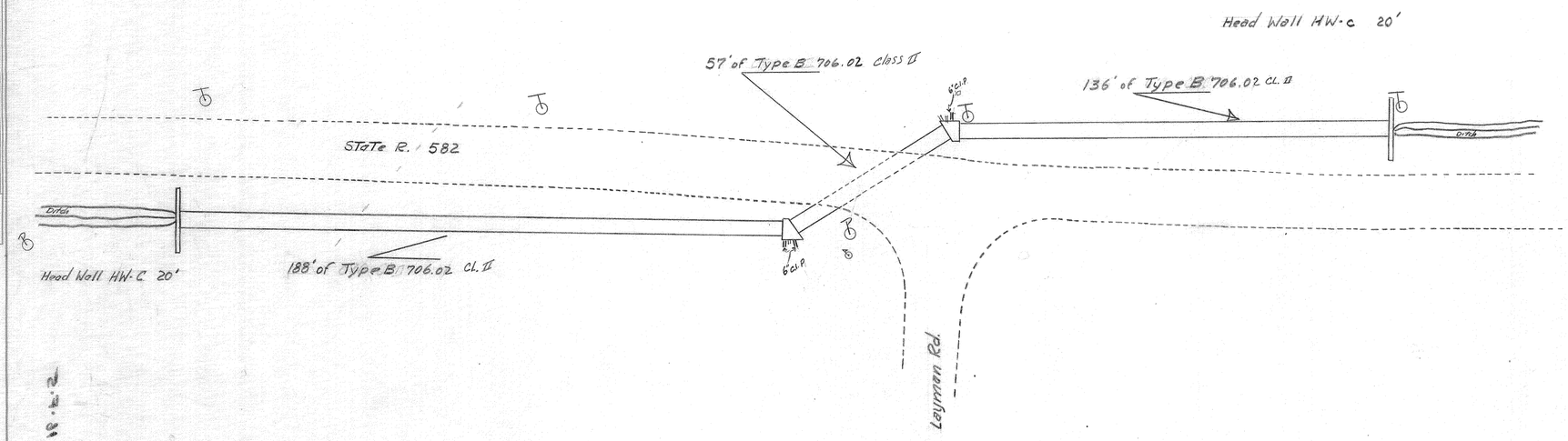

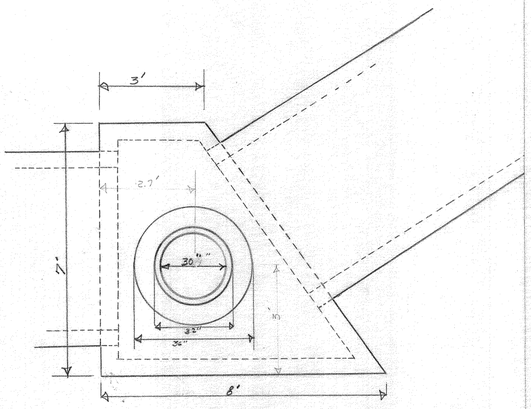

Special Basin

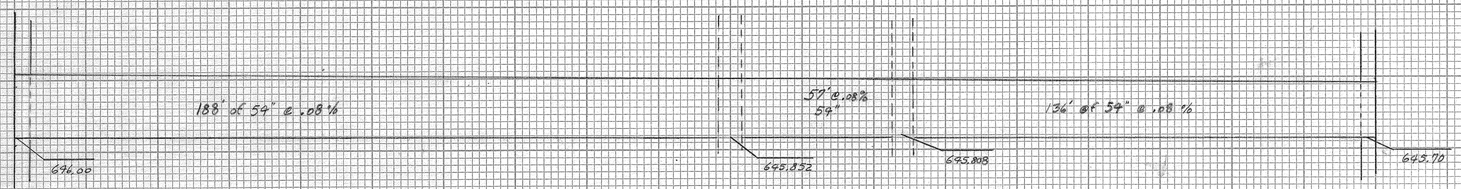

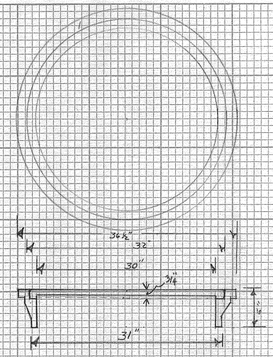

Casting for slab top basin

Item
604 BASIN
604.01 Description
Materials
604.01 precast solid concrete block
Frames & covers - 711.12 & 711.13
Structure concrete #99 & 511
Construction methods 604.03
Excavation & backfill 604.04
603.04 Bedding Class B
603.05 backfilling under Road
Item - 603 pipe culverts, Sewer & drains
603.01 description
603.02 Materials
Type B - 706.01
Type B - 706.02
Bitumineus pipe Joint filler 706.10
Granular material - 310.02

County to Furnish the following, as set forth in your letter to county commissioners August 10, 1966

Approx. 381' of Type B 706.02 Class II pipe
2 - material for inspection wells
2 - M.H. Casting
The County will construct
2 - Junction chambers

State to Furnish
Material & Labor for Headwalls
Labor & equipment to install approx 381' of 54" Type B 706.02 Class II pipe

Wood County Ohio
Ditch Improvement State Rout 582
Webster Twp. Section 30
Ditch # 2259
Wood County Engineer
Max Rothschild March 1969

PLAN
SURVEYED
PLOTTED
ALIGNMENT CHECKED
RT. OF WAY CHECKED
NOTE BOOK
NO.
BY
DATE

PROFILE
SURVEYED
PLOTTED
GRADES CHECKED
B.M. VERIFIED
STRUCTURE NOTATIONS CHECKED
NOTE BOOK
NO.
BY
DATE

DEC 5 1968