Sheet 6

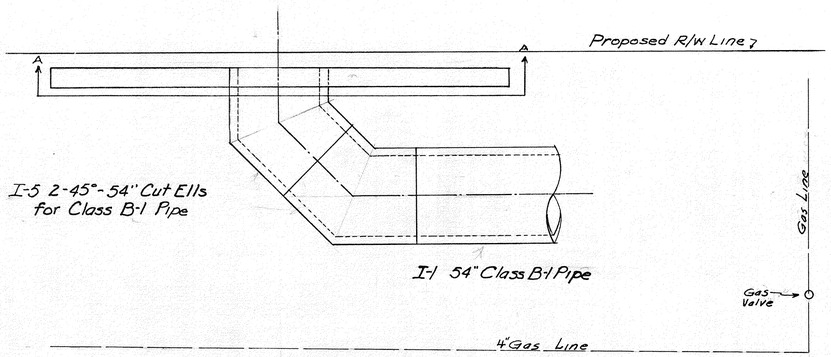

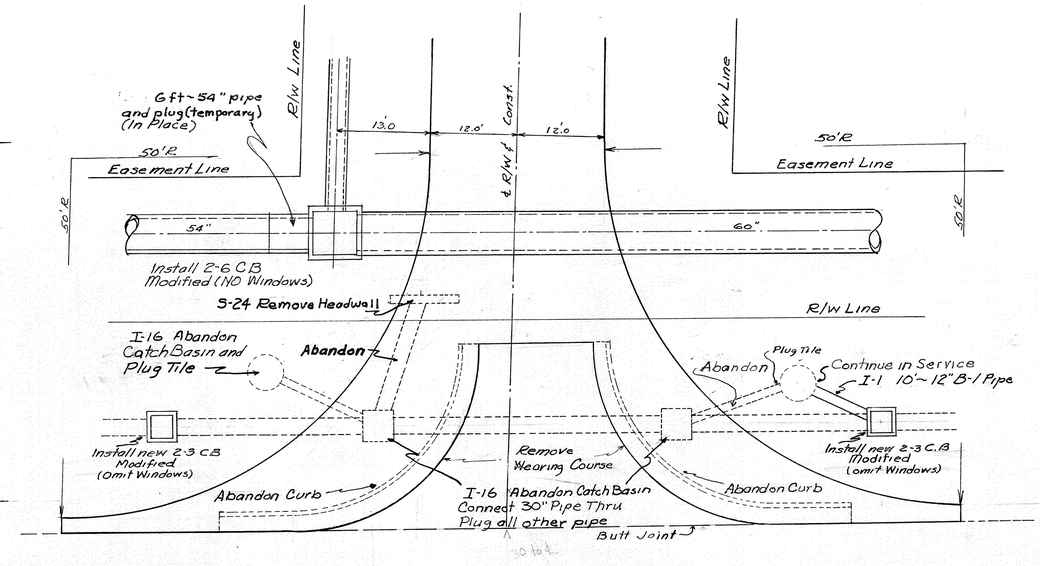

SCALE 1" = 10'

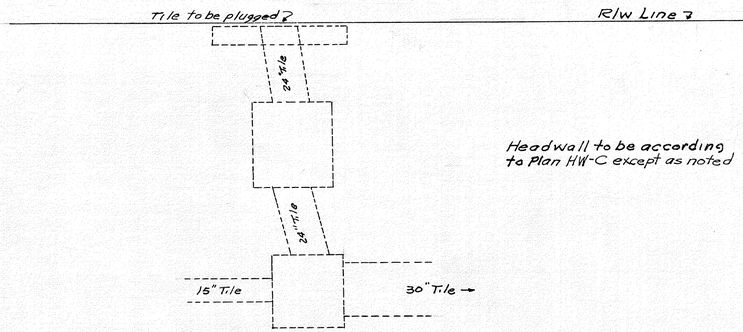

Headwall to be according
to Plan HW-C except as noted

SCALE 1/4" = 1'-0"

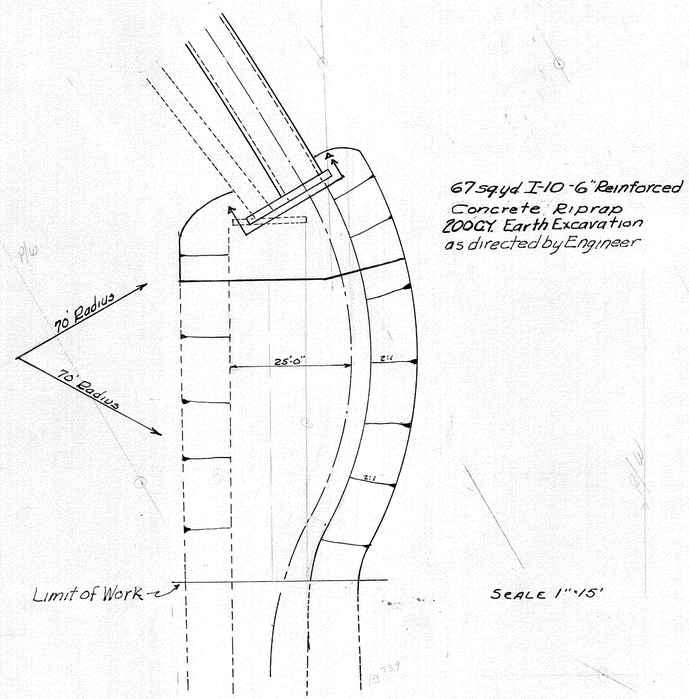

67 sq yd I-10-6" Reinforced
Concrete Riprap
200 C.Y. Earth Excavation
as directed by Engineer

SCALE 1" = 15'

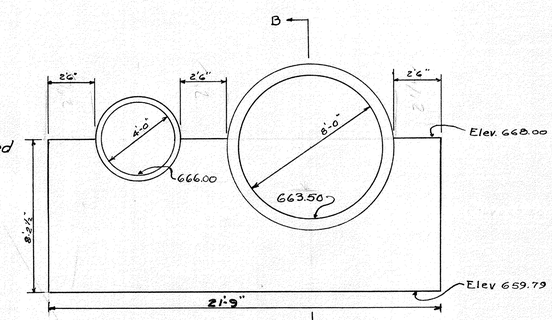

SECTION A-A

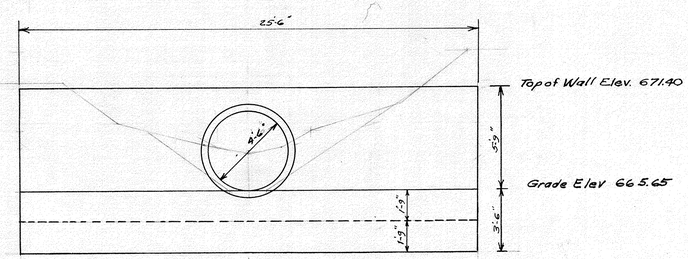

SECTION A-A

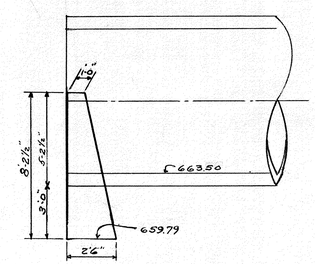

SECTION B-B

SP 53 HEADWALL AS PER PLAN

SCALE 1/4" = 1'-0"

SEP 30 1968